DATA SHEET

T 8003-GR EN

Series SMS · SMS MG-1 and SMS MG-7 Pneumatic Control Valves

Type 251GR Globe Valve

DIN version

Application

Control valve for process engineering applications with high industrial requirements

Nominal size	**DN 15 to 300**
Pressure rating	**PN 16 to 160**
Temperatures	**-50 to +550 °C**



Fig. 1: *SMS MG-1: Type 251GR Globe Valve with Type 3271 Pneumatic Actuator*

Type 251GR Globe Valve operated with

- Type 3271 Pneumatic Actuator (SMS MG-1 Control Valve)
- Type 3277 Pneumatic Actuator (SMS MG-7 Control Valve) for integral positioner attachment

Special features

- Plug and cage trim replaceable in the field
- Body made of cast steel
- Body made of cast stainless steel
- Soft seal
- Metal seal
- High-performance metal seal
- Balanced to handle high differential pressures

Optional with RFID tags with unique identification according to DIN SPEC 91406.

The control valves with their modular design can be equipped with various accessories, such as positioners, limit switches, solenoid valves and other devices according to DIN EN 60534-6-1[1)] and NAMUR Recommendation (see Information Sheet ▶ T 8350).

[1)] Accessories required. See associated actuator documentation.

A safety manual containing the safety-related data is optionally available for use in safety-instrumented systems (SIL requirements).

Versions

Operating temperature (medium temperature) with PTFE packing for temperatures from -29 to +250 °C, with graphite packing in combination with insulating section from -50 to +550 °C or with bel-

SAMSON AKTIENGESELLSCHAFT
Weismüllerstraße 3 · 60314 Frankfurt am Main, Germany
Phone: +49 69 4009-0 · samson@samsongroup.com · www.samsongroup.com

Edition April 2026

lows seal (independent from the packing version) up to +425 °C, nominal size DN 15 to 300, PN 16 to 160 (see Table 1)

- **SMS MG-1** (Fig. 1) • Type 251GR Globe Valve and Type 3271 Actuator with 350 to 2800 cm² actuator area (see Data Sheets ▶ T 8310-1, ▶ T 8310-2 and ▶ T 8310-3)
- **SMS MG-7** • Type 251GR Globe Valve and Type 3277 Actuator with 350 to 750v2 cm² actuator area for integral positioner attachment (see Data Sheet ▶ T 8310-1)

Further versions

- **Valve plug with pressure balancing**
- **Additional handwheel** • See Data Sheet ▶ T 8310-1
- **Type 251GR Valve with Type 3273 Hand-operated Actuator** • For valves with max. 30 mm rated travel and side-mounted handwheel for travel >30 mm (see Data Sheet ▶ T 8312)
- **SMS MG-TP Electric Control Valve** • On request
- Version with **clamped-in** or **screwed-in seat** or with **cage trim**
- **Version with insulating section for high temperatures**
- **Version with bellows seal**

Principle of operation of version with clamped-in/screwed-in seat

The medium flows through the valve in the direction indicated by the arrow. The valve plug determines the cross-sectional area of flow.

The valves can be equipped with a flow divider ST1 for noise reduction (see Data Sheet ▶ T 8081).

Pressure balancing must be used when high pressures or differential pressures act on the plug.

Fig. 2 and Fig. 3 show configuration examples.

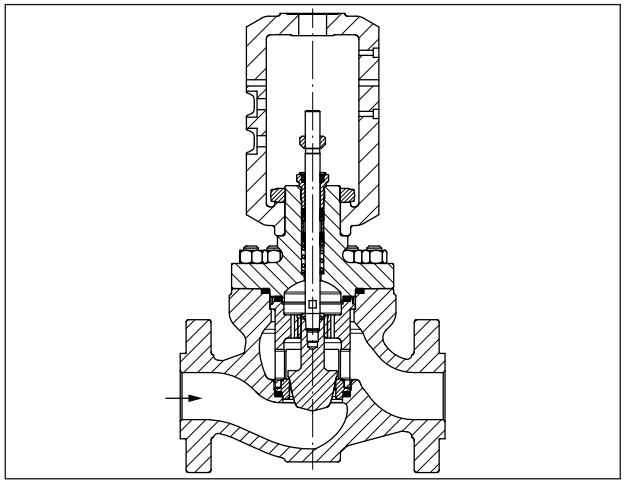

Fig. 2: *Type 251GR Globe Valve with clamped-in seat*

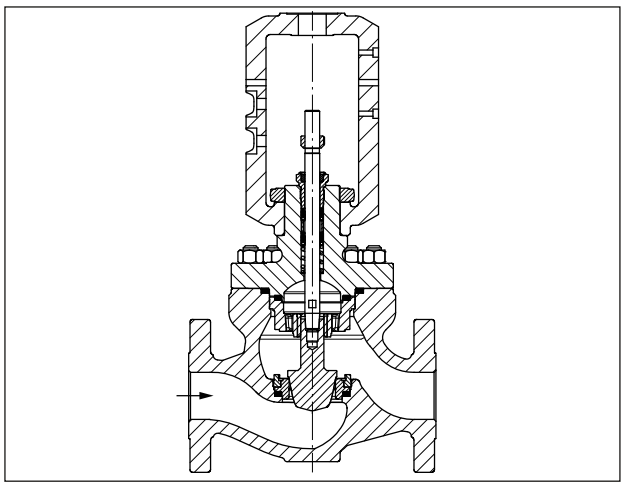

Fig. 3: *Type 251GR Globe Valve with screwed-in seat*

Principle of operation of cage version

The medium flows through the valve as indicated by the arrow on the valve body. A change in the pneumatic signal acting on the actuator changes the piston travel and how far the valve is opened as a result. The piston position and cage design determine the released cross-section and the flow rate with it.

Fig. 4 shows a configuration example.

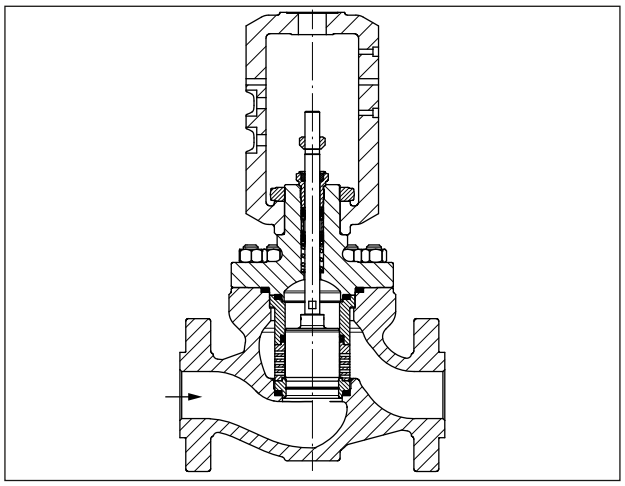

Fig. 4: *Type 251GR Globe Valve with cage trim*

All the trims shown in Fig. 2 to Fig. 4 are interchangeable in the field without any changes necessary to the pressure-bearing or pressure-retaining parts.

Fail-safe positions

Depending on how the springs are arranged in the Type 3271 or Type 3277 Pneumatic Actuator (see Data Sheets ▶ T 8310-1, ▶ T 8310-2 and ▶ T 8310-3), the valve has two different fail-safe positions that become effective when the supply air fails:

- **Actuator stem extends (fail-close):**
  The valve is closed upon air supply failure.
- **Actuator stem retracts (fail-open):**
  The valve is opened upon air supply failure.

Table 1: *Technical data for Type 251GR · DIN version*

Material		**Cast steel 1.0619**	**Cast steel 1.7357**	**Cast stainless steel 1.4408**
Nominal size and pressure rating		PN 16 to 100: DN 15 to 300 · PN 160: DN 15 to 150[2]		
Type of end connections	Flanges	B1 and B2 according to DIN EN 1092		
	Welding ends	DIN EN 12627		
Seat-plug seal		Metal seal · High-performance metal seal		
Characteristic		Equal percentage · Linear · Mod. linear · On/off		
Rangeability		50:1		
Conformity		CE EAC[5]		
Optional RFID tag		Application range according to the technical specifications and the explosion protection certificates. These documents are available on our website: ▶ www.samsongroup.com > Products > Electronic nameplate The permissible range for temperatures at the RFID tag is between -40 and +85 °C.		
Temperature ranges in °C · Permissible operating pressures according to pressure-temperature diagrams (see Information Sheet ▶ T 8000-2)				
Body with standard bonnet		-10 to +250 with PTFE packing		-50 to +250 with PTFE packing
		Up to +400 with graphite packing	Up to +425 with graphite packing	
Body with insulating section		-10 to +400	-10 to +500	-50 to +550
Body with bellows seal		-10 to +400	-10 to +450	-50 to +450
Trim[1]	Metal seal	-50 to +550		
	Balanced with PTFE	-50 to +250		
	Balanced, metal seal[3][4]	Room temperature up to +550		
Leakage class according to DIN EN 60534-4				
Trim	Metal seal	Standard: IV · High-performance metal seal: V		
	Balanced, metal seal	With PTFE ring (standard): IV · High-performance metal seal: V		

1) Only in combination with suitable body material
2) PN 160 only for version with clamped-in seat or cage trim
3) Only for version with cage trim
4) Only up to DN 100
5) Only up to DN 200

Table 2: *Materials for Type 251GR · DIN version*

Body of standard version		**Cast steel 1.0619**			**Cast steel 1.7357**			**Cast stainless steel 1.4408**
Valve bonnet		1.0619			1.7357			1.4408
Plug stem		1.4401/1.4404 or XM-19-H						
Seal ring for balanced plug (plug/piston)		PTFE with carbon · Metal seal[7]						
Guide bushing		1.4021[1]			1.4021[1][6]			2.4610
Packing		PTFE packing loaded by internal or external springs or adjustable graphite packing						
Body gasket		Spiral wound gasket, graphite/1.4401/1.4404						
Version with screwed-in seat and plug	Plug[3]	1.4006[2]	1.4021	1.4401/ 1.4404	1.4006[2]	1.4021	1.4401/ 1.4404	1.4401/ 1.4404[2]
	Seat	1.4006[2]	1.4021	1.4401/ 1.4404[2]	1.4006[2]	1.4021	1.4401/ 1.4404[2]	1.4401/ 1.4404[2]
	Seat fastening	1.4317						1.4409
Version with clamped-in seat and plug	Plug[3]	1.4006[2]	1.4021	1.4401/ 1.4404	1.4006[2]	1.4021	1.4401/ 1.4404	1.4401/ 1.4404[2]
	Seat	1.4006[2]	1.4021	1.4401/ 1.4404[2]	1.4006[2]	1.4021	1.4401/ 1.4404[2]	1.4401/ 1.4404[2]
	Seat fastening	1.4317						1.4408
Version with piston and cage	Piston	1.4006[1]	1.4021	1.4401/ 1.4404[4][5]	1.4006[1]	1.4021	1.4401/ 1.4404[4][5]	1.4401/ 1.4404[4][5]
	Cage	1.4006[1]	1.4021	1.4401/ 1.4404	1.4006[1]	1.4021	1.4401/ 1.4404	1.4401/ 1.4404
	Seat	1.4006[1]	1.4021	1.4401/ 1.4404[2]	1.4006[1]	1.4021	1.4401/ 1.4404[2]	1.4401/ 1.4404[2]
	Cylinder	1.4006[1]	1.4021	1.4401/ 1.4404	1.4006[1]	1.4021	1.4401/ 1.4404	1.4401/ 1.4404

1) Heat treated

2) Also with Stellite®-faced facing

3) Plug made of Stellite® 6 (up to seat bore Ø ≤55 mm) available

4) Hard chrome-plated guiding surface

5) Guiding surface also Stellite® faced when the facing is Stellite®-faced

6) T >500 °C: Made of 2.4856

7) Only for version with cage trim

Fatigue resistance of bellows

SAMSON has calculated the service life of metal bellows for full or partial strokes depending on the material. These values can help determine maintenance intervals. Maintenance intervals may vary due to the operating conditions of the actual plant (especially the pressure and temperature of the process medium).

Table 3: *Load cycles of metal bellows · Valve with pressure rating Class 300/PN 40*

Nominal size		Travel	Pressure rating Class 300/PN 40					
			Material: 1.4571			Material: 2.4819		
			Number of load cycles[1] for …					
			Operating pressure 40 bar/580 psi at 20 °C/68 °F		Operating pressure 10.3 bar/ 150 psi	Operating pressure 40 bar/580 psi at 20 °C/68 °F		Operating pressure 10.3 bar/ 150 psi
NPS	DN	mm	Full strokes	Partial strokes (40 % of the full stroke)	Full strokes	Full strokes	Partial strokes (40 % of the full stroke)	Full strokes
½ to 1½	15 to 40	15	400,000	>100 million	700,000	70,000	15 million	100,000
		19	90,000	100 million	150,000	30,000	600,000	35,000
2	50	15	1 million	>20 million	*)	200,000	>30 million	*)
		19	300,000	>20 million	*)	90,000	30 million	*)
		30	20,000	20 million	35,000	19,000	400,000	25,000
3 to 4	80 to 100	15	20 million	>1 billion	*)	300,000	>500,000	*)
		30	70,000	1 billion	100,000	30,000	500,000	50,000
		38	15,000	15 million	20,000	14,000	290,000	19,000
6	150	60	80,000	1 billion	140,000	70,000	4 million	*)

*) On request

1) The specified values are calculated and only serve as a reference. The actual values may differ depending on the application. SAMSON does not assume any liability or warranty in this case.

Table 4: *Load cycles of metal bellows · Valve with pressure rating Class 600/PN 100*

Nominal size		Travel	Pressure rating Class 600/PN 100					
			Material: 1.4571			Material: 2.4819		
			Number of load cycles[1] for …					
			Operating pressure 100 bar/1450 psi at 20 °C/68 °F		Operating pressure 10,3 bar/ 150 psi	Operating pressure 100 bar/1450 psi at 20 °C/68 °F		Operating pressure 10,3 bar/ 150 psi
NPS	DN	mm	Full strokes	Partial strokes (40 % of the full stroke)	Full strokes	Full strokes	Partial strokes (40 % of the full stroke)	Full strokes
½ to 1½	15 to 40	15	200,000	>100 million	700,000	45,000	800,000	100,000
		19	50,000	100 million	150,000	25,000	400,000	35,000
2	50	15	450,000	>1 million	*)	120,000	10 million	*)
		19	150,000	>1 million	*)	60,000	700,000	*)
		30	11,000	1 million	35,000	14,000	20,000	25,000
3 to 4	80 to 100	15	1 million	>60 million	*)	150,000	>280,000	*)
		30	40,000	60 million	100,000	20,000	280,000	50,000
		38	10,000	1 million	20,000	9,000	150,000	19,000
6	150	60	35,000	1 million	140,000	45,000	550,000	*)

*) On request

1) The specified values are calculated and only serve as a reference. The actual values may differ depending on the application. SAMSON does not assume any liability or warranty in this case.

K_{VS} coefficients for version with plug[1] • Equal percentage or linear

Terms for control valve sizing according to DIN IEC 60534-2-1 and DIN IEC 60534-2-2: F_L = 0.95, x_T = 0.75

[1] Parabolic plug (standard) • Values for other plug versions on request • Perforated plug: See Data Sheet ▶ T 8086

Table 5: *Version with screwed-in seat (equal percentage or linear)*

K_{VS}	0.26	0.43	0.65	0.95	1.7	2.6	4.3	6.9	13	21	32	47	74	110	190	273	400	700
K_{VS}-1	–	–	–	–	1.6	2.3	3.9	6.2	12	19	29	42	66	100	171	245	363	630
Seat bore in mm	4[1]	6[1]	6[1]	6[1]	12	12	24	24	27	33	42	55	70	85	110	130	170	228
Travel in mm	15	15	15	15	15	15	15	15	15	19	19	30	38	38	60	60	60	90

[1] Facing diameter = 8 mm (decisive for actuator sizing)

Table 6: *Versions without flow divider (screwed-in seat)*

K_{VS}	0.26	0.43	0.65	0.95	1.7	2.6	4.3	6.9	13	21	32	47	74	110	190	273	400	700
DN																		
15	•	•	•	•	•	•	•											
25			•	•	•	•	•	•	•									
40					•	•	•	•	•	•	•							
50									•	•	•	•						
80											•	•	•	•				
100												•	•	•	•			
150														•	•	•	•	
200															•	•	•	•

Table 7: *Versions with flow divider ST1 (K_{VS}-1) (screwed-in seat)*

K_{VS}-1	–	–	–	–	1.6	2.3	3.9	6.2	12	19	29	42	66	100	171	245	363	630
DN																		
15					•	•	•											
25					•	•	•	•	•									
40					•	•	•	•	•	•	•							
50									•	•	•	•						
80											•	•	•	•				
100												•	•	•	•			
150														•	•	•	•	
200															•	•	•	•

Table 8: *Version with clamped-in seat (equal percentage or linear)*

K_{VS}	0.26	0.43	0.65	0.95	1.7	2.6	3.9	4.3	6.9	12	13	21	29	32	42	47	74	100	110	171	190	273	363	400	630	700	1100	1500
Seat bore in mm	4[1)]	6[1)]	6[1)]	6[1)]	12	12	24	24	24	24	27	33	42	42	55	55	70	85	85	110	110	130	170	170	228	228	280	330
Travel in mm	15	15	15	15	15	15	15	15	15	15	15	19	19	19	30	30	38	38	38	60	60	60	60	60	90	90	120	150

[1)] Facing diameter = 8 mm (decisive for actuator sizing)

Table 9: *Versions without flow divider (clamped-in seat)*

K_{VS}	0.26	0.43	0.65	0.95	1.7	2.6	3.9	4.3	6.9	12	13	21	29	32	42	47	74	100	110	171	190	273	363	400	630	700	1100	1500
DN																												
15	•	•	•	•	•	•	•																					
25			•	•	•	•		•	•	•																		
40					•	•		•	•		•	•	•															
50											•	•		•	•													
80														•		•	•	•										
100																•	•		•	•								
150																			•		•	•	•					
200																					•	•		•	•			
250																								•		•	•	
300																										•	•	•

K_{VS} coefficients for version with cage • Equal percentage or linear

Table 10: *Version with cage (equal percentage or linear)*

		Cage with full flow rate								
K_{VS}		14.5	32	52	118	195	410	720	1050	1550
Trim		$1^5/_{16}$"	$1^7/_8$"	$2^5/_{16}$"	3½"	4½"	7"	9"	11"	13"
Travel	mm	19	19	30	38	60	75	90	120	150

Table 11: *Version with cage (equal percentage or linear)*

		Cage with reduced flow rate								
K_{VS}		9.4	21	36	82	126	290	520	735	1100
Trim		$1^5/_{16}$"	$1^7/_8$"	$2^5/_{16}$"	3½"	4½"	7"	9"	11"	13"
Travel	mm	19	19	30	38	60	75	90	120	150

Table 12: *Versions with cage • FTO (Flow to open)*

	Cage with full flow rate									Cage with reduced flow rate								
K_{VS}	14.5	32	52	118	195	410	720	1050	1550	9.4	21	36	82	126	290	520	735	1100
DN																		
25	•									•								
40		•									•							
50			•									•						
80				•									•					
100					•									•				
150						•									•			
200							•									•		
250								•									•	
300									•									•

K_{VS} coefficients for version with flow divider cage FDC1 • Equal percentage, linear or modified linear

Table 13: *Version with cage FDC1 (equal percentage)*

		Cage with full flow rate								
K_{VS}-FDC1		**12**	**26**	**42**	**95**	**154**	**330**	**585**	**850**	**1260**
Trim		$1^5/_{16}$"	$1^7/_8$"	$2^5/_{16}$"	3½"	4½"	7"	9"	11"	13"
Seat bore	mm	31.34	45.63	56.74	86.98	112.38	176.15	227	277.4	328.2
Cage inside Ø	mm	33.34	47.63	58.74	88.98	114.38	177.98	228.8	279.6	330.4
Travel	mm	19	19	30	38	60	75	90	120	150

Table 14: *Version with cage FDC1 (equal percentage)*

		Cage with reduced flow rate								
K_{VS}-FDC1		**8.5**	**17**	**29**	**66**	**106**	**230**	**410**	**585**	**880**
Trim		$1^5/_{16}$"	$1^7/_8$"	$2^5/_{16}$"	3½"	4½"	7"	9"	11"	13"
Seat bore	mm	31.34	45.63	56.74	86.98	112.38	176.15	227	277.4	328.2
Cage inside Ø	mm	33.34	47.63	58.74	88.98	114.38	177.98	228.8	279.6	330.4
Travel	mm	19	19	30	38	60	75	90	120	150

Table 15: *Versions with cage FDC1 (K_{VS}-FDC1) • (equal percentage)*

	Cage with full flow rate									Cage with reduced flow rate								
K_{VS}-FDC1	**12**	**26**	**42**	**95**	**154**	**330**	**585**	**850**	**1260**	**8.5**	**17**	**29**	**66**	**106**	**230**	**410**	**585**	**880**
DN																		
25	•									•								
40		•									•							
50			•									•						
80				•									•					
100					•									•				
150						•									•			
200							•									•		
250								•									•	
300									•									•

Table 16: *Version with cage FDC1 (linear)*

		Cage with full flow rate								
K_{VS}-FDC1		**13**	**29**	**47**	**106**	**171**	**370**	**650**	**945**	**1400**
Trim		$1^5/_{16}$"	$1^7/_8$"	$2^5/_{16}$"	3½"	4½"	7"	9"	11"	13"
Seat bore	mm	31.34	45.63	56.74	86.98	112.38	176.15	227	277.4	328.2
Cage inside Ø	mm	33.34	47.63	58.74	88.98	114.38	177.98	228.8	279.6	330.4
Travel	mm	19	19	30	38	60	75	90	120	150

Table 17: *Version with cage FDC1 (linear)*

		Cage with reduced flow rate								
K_{VS}-FDC1		**9.4**	**19**	**32**	**74**	**118**	**260**	**455**	**650**	**990**
Trim		$1^5/_{16}$"	$1^7/_8$"	$2^5/_{16}$"	3½"	4½"	7"	9"	11"	13"
Seat bore	mm	31.34	45.63	56.74	86.98	112.38	176.15	227	277.4	328.2
Cage inside Ø	mm	33.34	47.63	58.74	88.98	114.38	177.98	228.8	279.6	330.4
Travel	mm	19	19	30	38	60	75	90	120	150

Table 18: *Versions with cage FDC1 (K_{VS}-FDC1) • (linear)*

	Cage with full flow rate									Cage with reduced flow rate								
K_{VS}-FDC1	**13**	**29**	**47**	**106**	**171**	**370**	**650**	**945**	**1400**	**9.4**	**19**	**32**	**74**	**118**	**260**	**455**	**650**	**990**
DN																		
25	•									•								
40		•									•							
50			•									•						
80				•									•					
100					•									•				
150						•									•			
200							•									•		
250								•									•	
300									•									•

Table 19: *Version with cage FDC1 (mod. lin)*

K_{VS}-FDC1		**14.5**	**32**	**52**	**118**	**195**	**410**	**720**	**1050**	**1550**
Trim		$1^5/_{16}$"	$1^7/_8$"	$2^5/_{16}$"	3½"	4½"	7"	9"	11"	13"
Seat bore	mm	31.34	45.63	56.74	86.98	112.38	176.15	227	277.4	328.2
Cage inside Ø	mm	33.34	47.63	58.74	88.98	114.38	177.98	228.8	279.6	330.4
Travel	mm	19	19	30	38	60	75	90	120	150

Table 20: *Versions with cage FDC1 (K_{VS}-FDC1) • (modified linear)*

K_{VS}-FDC1		**14.5**	**32**	**52**	**118**	**195**	**410**	**720**	**1050**	**1550**
NPS	DN									
1	25	•								
1½	40		•							
2	50			•						
3	80				•					
4	100					•				
6	150						•			
8	200							•		
10	250								•	
12	300									•

Table 21: *Dimensions in mm for SMS MG-1 and SMS MG-7 Control Valves*

Valve	DN	15	25	40	50	80	100	150	200	250	300
Length L (flanges)	PN 16 to 40	130	160	200	230	310	350	480	600	730	850
	PN 63 to 160	210	230	260	300	380	430	550	650[2]	775	900
Length L (welding ends)	PN 16 to 40	130	160	200	230	310	350	480	600	730	850
	PN 63 to 160	210	230	260	300	380	430	550	650[2]	775	900
Height H4 **standard version**		160	160	160	186	210	244	319	405	520	592
Height H4 with **insulating section**		225	225	255	290	315	375	530	610	830	900
Height H4 with **bellows seal**		406	406	399	464	560	575	850	[3]	–	–
H8 for actuator	350 cm²	286	286	286	286	286	286	–	–	–	–
	350v2 cm²	286	286	286	286	286	286	–	–	–	–
	355v2 cm²	286	286	286	286	286	286	503	–	–	–
	750 cm²	286	286	286	286	286	286	503	–	–	–
	1000 cm²	341	341	341	341	341	341[4] / 436[5]	503	503	588	–
	1400-60 cm²	341	341	341	341	341	341[4] / 436[5]	503	503	588	–
	1400-120 cm²	–	–	–	526	526	526	588 / 735[6]	588 / 735[6]	735	735
	2800 cm²	–	–	–	526	526	526	588 / 735[6]	588 / 735[6]	735	735
	2x 2800 cm²	–	–	–	526	526	526	588 / 735[6]	588 / 735[6]	735	735
H2[1]	PN 16 to 40	44	48	62	75.5	105.5	139	185	215	250	277
	PN 63	44	48	62	75.5	105.5	142	185	215	260	287
	PN 100	44	48	62	75.5	105.5	142	185	220	277.5	308
	PN 160	44	57	62	75.5	106.5	147	185	–	–	–

[1] The H2 dimension is the distance from the middle of the flow channel to the bottom of the valve body. The dimension up to the bottom of the flange may differ. It may be lower or higher. Flange standards (see Table 1).

[2] PN 63 to 100 only

[3] On request

[4] With 30 or 38 mm travel

[5] With 60 mm travel

[6] With 60, 75 or 90 mm travel

Table 22: *Further dimensions[1] in combination with Type 3271 Pneumatic Actuator or Type 3277 Pneumatic Actuator*

Actuator area		cm²	350	350v2	355v2	750v2	1000	1400-60	1400-120	2800	2x 2800
Diaphragm ØD		mm	280	280	280	394	462	530	534	770	770
H[2]	Type 3271	mm	82	92	131	236	403	337	598	713	1213
H[2]	Type 3277	mm	82	82	121	236	–	–	–	–	–
H3[3]		mm	110	110	110	190	610	610	650	650	650
H5	Type 3277	mm	101	101	101	101	–	–	–	–	–
Thread	Type 3271		M30x1.5	M30x1.5	M30x1.5	M30x1.5	M60x1.5	M60x1.5	M100x2	M100x2	M100x2
Thread	Type 3277		M30x1.5	M30x1.5	M30x1.5	M30x1.5	–	–	–	–	–

Actuator area		cm²	350	350v2	355v2	750v2	1000	1400-60	1400-120	2800	2x 2800
a	Type 3271		G ⅜ (⅜ NPT)	G ⅜ (⅜ NPT)	G ⅜ (⅜ NPT)	G ⅜ (⅜ NPT)	G ¾ (¾ NPT)	G ¾ (¾ NPT)	G 1 (1 NPT)	G 1 (1 NPT)	G 1 (1 NPT)
a2	Type 3277		G ⅜[4)]	G ⅜[4)]	G ⅜[4)]	G ⅜[4)]	–	–	–	–	–

1) The specified dimensions are theoretical maximum design values for a specific standard device configuration. They do not reflect every possible case of use. The actual values for individual devices may differ depending on the device configuration and the specific application.

2) Height including lifting eyelet or female thread and eyebolt according to DIN 580. Height of the swivel hoist may differ. Actuators up to 355v2 cm² without lifting eyelet or female thread.

3) Minimum clearance required to remove the actuator

4) An adapter G ⅜ to ⅜ NPT is available for the a2 connection. It can be ordered separately using the following article number: 100160362

Dimensional drawings

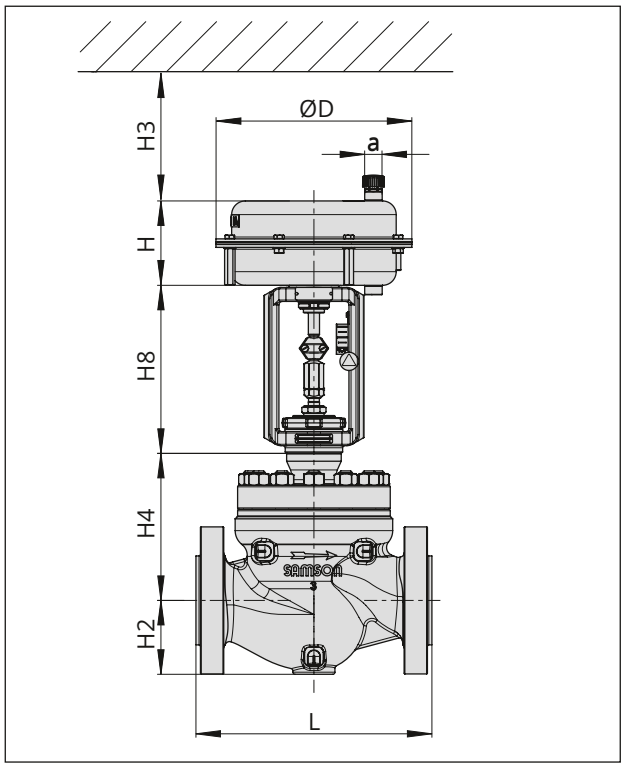

Fig. 5: *SMS MG-1 Control Valve: Type 251GR Valve with Type 3271 Pneumatic Actuator*

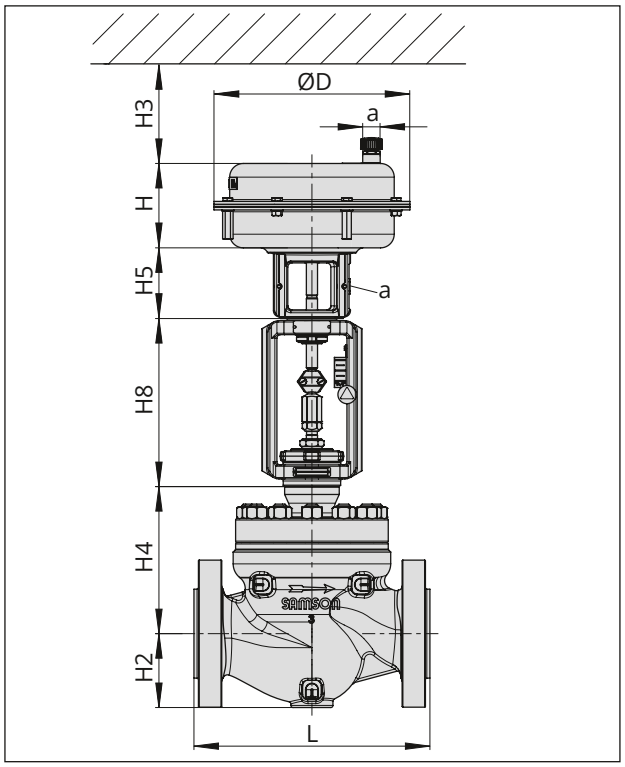

Fig. 6: *SMS MG-7 Control Valve: Type 251GR Valve with Type 3277 Pneumatic Actuator*

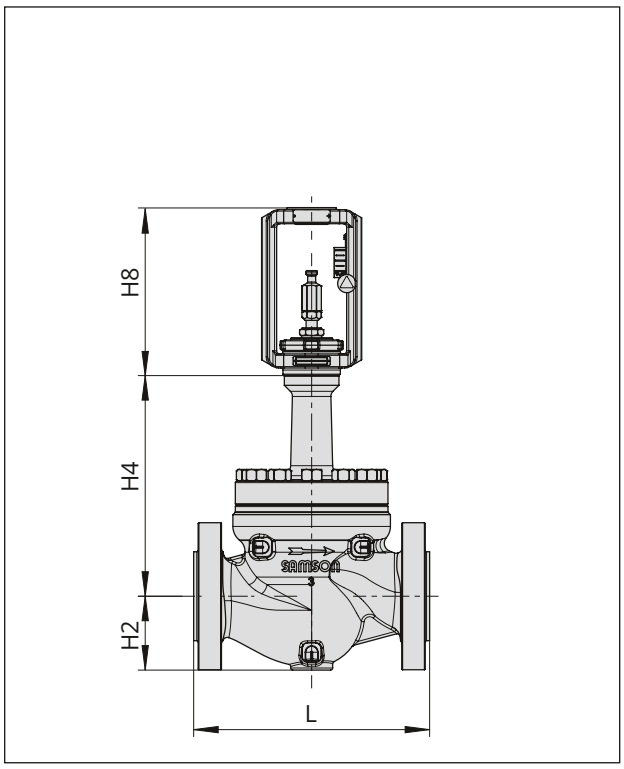

Fig. 7: *Type 251GR Valve with insulating section*

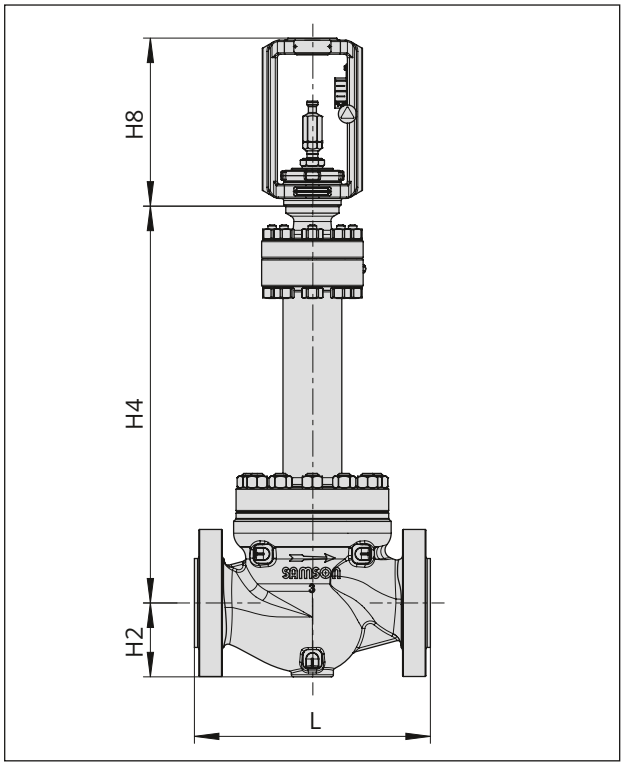

Fig. 8: *Type 251GR Valve with bellows seal*

Table 23: *Weights in kg for Type 251GR Valve with B1 flanges according to DIN EN 1092-1*

Valve	DN	15	25	40	50	80	100	150	200	250	300
Standard version (standard bonnet)											
Valve[1] without actuator	PN 16	9	13	19	28	43	65	136	232	374	546
	PN 25	9	13	19	31	46	70	150	–	–	–
	PN 40	9	13	19	31	46	70	150	257	428	626
	PN 63	11	17	24	37	53	90	196	353	555	804
	PN 100	11	17	24	41	62	99	207	377	610	906
	PN 160	13	17	25	44	78	117	281	–	–	–
Version with insulating section											
Valve[1] without actuator	PN 16	10	14	21	30	49	74	163	267	404	577
	PN 25	10	14	21	33	53	79	178	–	–	–
	PN 40	10	14	21	33	53	79	178	195	458	657
	PN 63	12	18	26	40	55	93	210	367	588	835
	PN 100	12	18	26	43	64	103	221	392	642	937
	PN 160	14	20	28	46	81	121	295	–	–	–
Version with bellows seal											
Valve[1] without actuator	PN 16	–	13	18	26	40	63	130	212	–	–
	PN 25	–	13	18	29	43	69	145	–	–	–
	PN 40	–	13	18	29	43	69	145	239	–	–
	PN 63	–	17	23	35	46	79	171	294	–	–
	PN 100	–	17	23	39	55	88	181	318	–	–
	PN 160	–	–	–	–	–	–	–	–	–	–

[1] The weights specified apply to a specific standard device configuration. Weights of other valve configurations may differ depending on the version (material, trim etc.).

Table 24: *Weights[1] for Type 3271 and Type 3277 Pneumatic Actuators*

Type ... Actuator	Actuator area in cm²		350	350v2	355v2	750v2	1000	1400-60	1400-120	2800	2x 2800
3271	Without handwheel	kg	8	11.5	15	36	80	70	175	450	950
3271	With handwheel	kg	13	16.5	20	41	180	175	300[2]/ 425[3]	575[2]/ 700[3]	*)
3277	Without handwheel	kg	12	15	19	40	–	–	–	–	–
3277	With handwheel	kg	17	20	24	45	–	–	–	–	–

*) On request

[1] The weights specified apply to a specific standard device configuration. Weights of other actuator configurations may differ depending on the version (material, number of actuator springs etc.).

[2] Side-mounted handwheel up to 80 mm travel

[3] Side-mounted handwheel with travel higher than 80 mm travel

Selection and sizing of the valve

1. Calculate K_{VS} coefficient according to DIN EN 60534-1.
2. Select nominal size DN and K_{VS} coefficient.
3. Calculation of permissible differential pressure Δp on request
4. Select the valve body material from Table 1 and Table 2 as well as from the pressure-temperature diagrams (see Information Sheet ▶ T 8000-2).
5. Select accessories from Table 1 and Table 2.

Ordering text

The following specifications are required on ordering:

Nominal size	DN …
Pressure rating	PN …
Body material	See Table 2
Bonnet	Standard bonnet, insulating section or bellows seal
Type of end connections	Flanges or welding ends
Plug/piston	Standard or balanced Soft seal, metal seal or high-performance metal seal
Characteristic	Equal percentage, linear, mod. linear or on/off
Actuator	Type 3271 or Type 3277 (see Data Sheets ▶ T 8310-1, ▶ T 8310-2 and ▶ T 8310-3)
Fail-safe action	Fail-close or fail-open
Process medium	Density in kg/m³ and temperature in °C
Flow rate	in kg/h or m³/h in standard or operating state
Pressure	p_1 and p_2 in bar (absolute pressure p_{abs}), with minimum, normal and maximum flow rate
RFID tag	Yes/No
Valve accessories	Positioner and/or limit switch

Associated Information Sheet	▶ T 8000-X
Associated Data Sheets for pneumatic actuators	▶ T 8310-1 to ▶ T 8310-3
Associated Mounting and Operating Instructions	▶ EB 8003-GR