DATA SHEET

T 5656 EN

Type 5656 SAM MOBILE+ Gateway

CE

Application

Wireless communication with energy and utility meters, heating controllers as well as universal Modbus RTU devices



Fig. 1: *SAM MOBILE+ Gateway*

- Remote polling of meters with an M-Bus interface (heat, electricity, water, gas)
- Remote maintenance and visualization of SAMSON TROVIS 5573, 5578, 5576, 5579 and 5578-E Controllers as well as other devices with a Modbus RTU interface

Special features

- Remote switch (floating relay output)
- Potentiometers (0 to 10 V or PWM)
- Processing of analog and digital status signals
- LEDs for status readings
- 0 to 10 V inputs
- Pt1000 input
- Binary input
- Floating relay output
- 0 to 10 V output
- PWM output

Design and principle of operation

The gateway allows wireless communication with energy and utility meters, heating controllers as well as universal Modbus RTU devices connected to SAMSON's SAM DISTRICT ENERGY web portal or a Modbus TCP client using the LTE-M, NB-IoT and GPRS communication technology standard.

Status indication

The gateway has LEDs to indicate its operating and communication state. The operating states of the gateway are indicated by LEDs during start-up and servicing.

⇨ Blinking pattern: ▶ EB 5656

Modbus TCP communication

All the SAM gateways have a new function to forward requests over Modbus TCP in addition to the usual communication based on the request and response method from Modbus TCP to Modbus RTU.

The added function makes it possible to directly connect Modbus TCP devices to the gateway and communicate with them.

This makes the following actions possible:

1. Response over internal Modbus slaves
2. Forwarding to another Modbus TCP server
3. Forwarding to Modbus RTU interfaces (UARTs) of the gateway

Modbus topology

The gateway can receive two types of TCP-based interface requests:

SAMSON AKTIENGESELLSCHAFT
Weismüllerstraße 3 · 60314 Frankfurt am Main, Germany
Phone: +49 69 4009-0 · samson@samsongroup.com · www.samsongroup.com

Edition July 2025

1. Modbus TCP server
2. SAM DISTRICT ENERGY web portal (including push mode)

Electrical connection

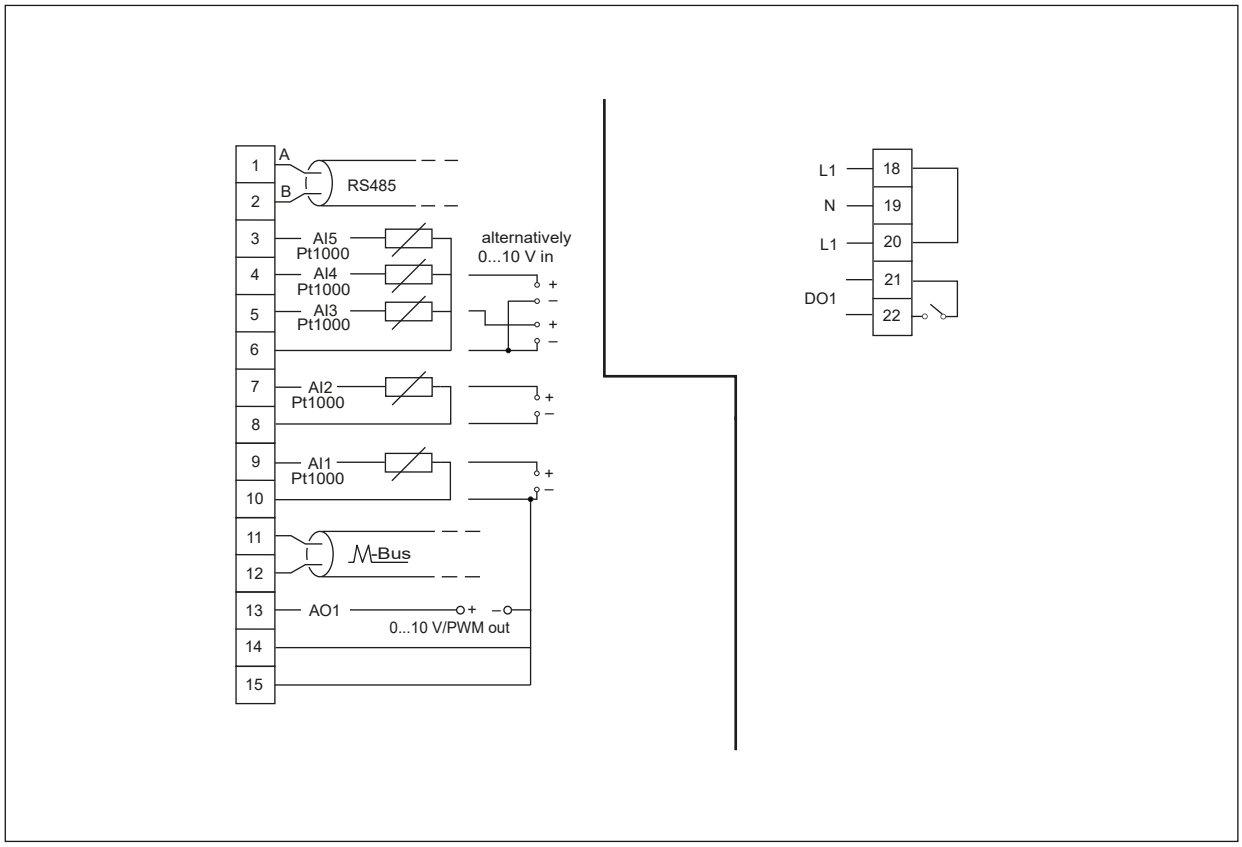

Fig. 2: *Electrical connection · Type 5656*

Technical data

SAM MOBILE+ Gateway Type 5656	
Mobile network interface	SMA antenna female connector, SIM card slot (ID-000 size, 25x15 mm) Cat M1: B1/2/3/4/5/8/12/13/18/19/20/25/26/27/28/66 Cat NB2: B1/2/3/4/5/8/12/13/17/18/19/20/25/28/66 GSM 850/EGSM 900/DCS 1800/PCS 1900
LAN port (Ethernet)	IEEE 802.3, 8-pole RJ-45 port Modbus TCP protocol according to: MODBUS Messaging on TCP/IP Implementation Guide V1.0b (24.10.06), MODBUS TCP Security V21_2018-07-24 (TLS 1.2) – TLS 1.3
Controller interfaces	1x RS-485 Modbus interface for two-wire bus 1x TTL Modbus interface: RJ-45 port (8 pole), assignment according to TROVIS 5573/5578 Controller 1x RS-232 Modbus interface: RJ-45 port (8 pole), assignment according to TROVIS 5576/5579 Controller
M-Bus interface	Meter bus (two-wire), max. 3 M-Bus loads, M-Bus (mini master) according to EN 13757 (formerly EN 1434-3) or adapted
Inputs	4x 0 to 10 V, Pt1000 or DI binary input (optional) 1x Pt1000 or DI binary input
Outputs	1x floating relay output with varistor, max. load 250 V AC, 2 A 1x analog output 0 to 10 V or PWM, (175 Hz, 10 V, max. 10 mA)
Supply voltage	85 to 250 V, 48 to 62 Hz
Power line frequency	48 to 62 Hz
Power consumption	Typically 2 W
Permissible temperature ranges	
Ambient	0 to 50 °C
Storage and transport	-10 to +60 °C
Degree of protection	IP40 according to EN 60529
Class of protection	II according to EN 61140
Degree of contamination	2 according to EN 60730-1
Overvoltage category	II according to EN 60730-1
Testing standards	EN 60730-1, EN 62368-1, EN EN 61000-6-1, EN 61000-6-3, RED Radio Equipment Directive 2014/53/EU, EN 301489-1, EN 300220-1
Conformity	CE
Material	PA (base, cover, housing), PA (window)
Optional additional equipment	SIM card, rod antenna, network cable (LAN) NOTICE: The Type 5656 Gateway must only be connected to SAMSON's SAM DISTRICT ENERGY web portal using the SIM card supplied by SAMSON.

Dimensions

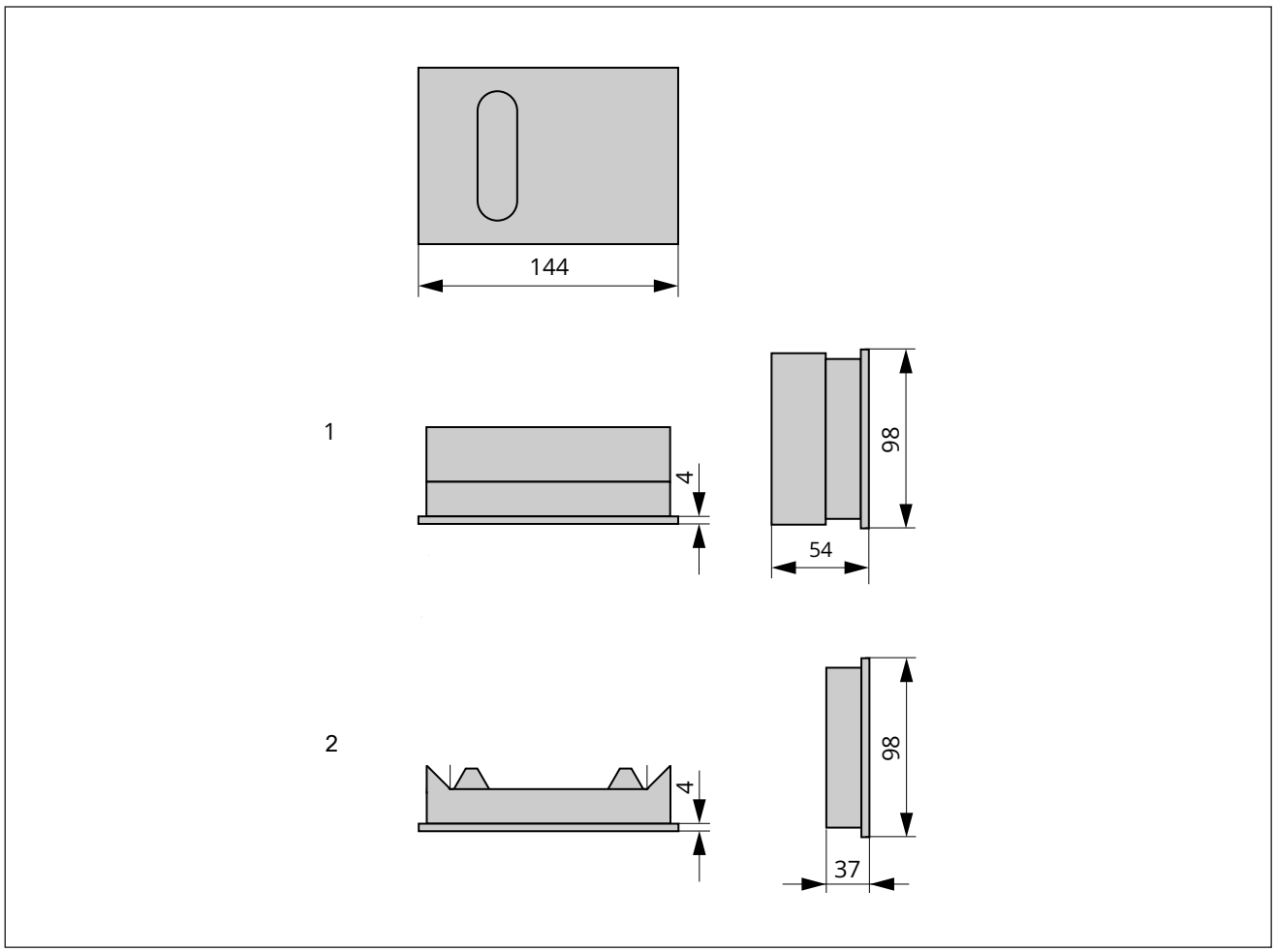

Fig. 3: *Dimensions in mm · SAM MOBILE+ Gateway with and without base*

1 Gateway with base
2 Gateway without base

Accessories

Designation	Description	Order no.
SA5000	Surge arrester for two-wire RS-485 bus systems	1400-9868
SACO55	Surge arrester with integrated two-wire RS-232 to RS-485 converter	1400-9771
iCon485	Adapter to connect TROVIS 5573 or TROVIS 5578 Heating and District Heating Controller to a RS-485 bus	8812-2002
CoRe02	Converter/repeater or RS-232 or RS-485 interface	1400-9670
SAM DISTRICT ENERGY	Connection of TROVIS (heating) controllers to the web portal	900000131
SAM DISTRICT ENERGY	Connection of utility meters to the web portal	900000130
SAM DISTRICT ENERGY	Connection of Type 3374 Electric Actuators to the web portal	900000269
SAM DISTRICT ENERGY	Connection of TROVIS 5724-8 and TROVIS 5725-8 Electric Actuators with Process Controller to the web portal	900000266
Antenna with magnetic base (SMA)	2.5 m cable length	1402-0853
Antenna with magnetic base (SMA)	5 m cable length	1402-0852
Antenna with magnetic base (SMA)	10 m cable length	1402-1908
Rod antenna (SMA)	Multi-band	1402-0854
Configuration software	Link for download: ▶ SAMSON DeviceLink	

Ordering text

Type 5656 SAM MOBILE+ Gateway

with an activated SIM card inserted into it

- with base or antenna (material no. 100264809)
- without base or antenna (replacement device; material no. 100270592)

Associated Mounting and Operating Instructions

- SAM MOBILE+ Gateway ▶ EB 5656

Associated brochure

- OverviewSAM DISTRICT ENERGY ▶ WA 380

2026-09-17 | English | 4000497496 | 1.9