TROVIS 5500 Automation System
TROVIS 5578 Heating and District Heating Controller

Mounting and Operating Instructions

EB 5578 EN

Firmware version 2.30

Edition November 2017

Definition of signal words

DANGER!
Hazardous situations which, if not avoided, will result in death or serious injury

WARNING!
Hazardous situations which, if not avoided, could result in death or serious injury

NOTICE
Property damage message or malfunction

Note:
Additional information

Tip:
Recommended action

Firmware revisions	
Old	**New**
2.20	**2.24**
	New systems Anl 1.9-1 and 1.9-2
2.24	**2.26**
	New function: **Error message** (CO5 > F07)
	AT with 0-10 V function (CO5 > F23) extended Outdoor temperatures can be received or sent using a 0 to 10 V signal.
2.26	**2.28**
	New system Anl 11.5
	Alarm and event lists each with the last 100 entries
2.28	**2.30**
	It is possible to connect PTC or Ni 1000 sensors (Pt 1000 sensors only possible below this firmware version)

1 Safety instructions 8
1.1 Disposal 8
2 Operation 9
2.1 Operating controls 9
2.1.1 Rotary pushbutton 9
2.1.2 Rotary switch 9
2.2 Reading information 10
2.2.1 Adapting the Trend-Viewer 13
2.3 Selecting operating modes 14
2.4 Setting the time and date 16
2.5 Setting the times-of-use 18
2.6 Setting special times-of-use 20
2.6.1 Party timer 20
2.6.2 Public holidays 21
2.6.3 Vacations 22
2.7 Entering day and night set points 24
3 Start-up 26
3.1 Setting the system code number 27
3.2 Activating and deactivating functions 28
3.3 Changing parameters 30
3.4 Calibrating sensors 31
3.5 Altering the display contrast 32
3.6 Changing the display language 33
3.7 Loading default setting 33
4 Manual mode 35
5 Systems 36
6 Functions of the heating circuit 106
6.1 Outdoor-temperature-controlled control 106
6.1.1 Gradient characteristic 107
6.1.2 Four-point characteristic 109
6.2 Fixed set point control 110
6.3 Underfloor heating/drying of jointless floors 111

6.4 Outdoor temperature for rated operation (day) 112
6.5 Buffer tanks stems Anl 16.x 112
6.6 Summer mode 114
6.7 Delayed outdoor temperature adaptation 115
6.8 Remote operation 115
6.9 Optimization 116
6.10 Flash adaptation 117
6.10.1 Flash adaptation without outdoor sensor (based on room temperature) 118
6.11 Adaptation 119
6.12 Cooling control 119
7 Functions of the DHW circuit 121
7.1 DHW heating in the storage tank system 121
7.1.1 DHW circuit additionally controlled by a globe valve 124
7.2 DHW heating in the storage tank charging system 125
7.3 DHW heating in instantaneous heating system 127
7.4 Domestic hot water heating with solar system 128
7.5 Intermediate heating 128
7.6 Parallel pump operation 129
7.7 Circulation pump during storage tank charging 129
7.8 Priority position 130
7.8.1 Reverse control 130
7.8.2 Set-back operation 130
7.9 Forced charging of DHW storage tank 131
7.10 Thermal disinfection of DHW storage tank 131
8 System-wide functions 133
8.1 Automatic summer/standard time switchover 133
8.2 Frost protection 133
8.3 Forced pump operation 134
8.4 Return flow temperature limitation 134
8.5 Condensate accumulation control 135
8.6 Three-step control 136

8.7 On/off control 136
8.8 Continuous control in control circuit RK1 137
8.9 Releasing a control circuit/controller with binary input 137
8.10 Speed control of charging pump 138
8.11 Processing an external demand in control circuit RK1 138
8.12 Capacity limitation in RK1 140
8.13 Creep feed rate limitation with a binary input 141
8.14 Device bus 142
8.14.1 Requesting and processing an external demand 142
8.14.2 Sending and receiving outdoor temperatures 144
8.14.3 Synchronizing the clock 144
8.14.4 Priority over all controllers 145
8.14.5 Connecting a TROVIS 5570 Room Panel 145
8.14.6 Display error messages issued by the device bus 146
8.15 Requesting a demand by issuing a 0 to 10 V signal 146
8.16 Connecting potentiometers for valve position input 147
8.17 Locking manual level 147
8.18 Locking the rotary switch 147
8.19 Feeder pump operation 147
8.20 External demand for heat due to insufficient heat supply 148
8.21 Entering customized key number 148
9 Operational faults 149
9.1 Error list 149
9.2 Sensor failure 150
9.3 Temperature monitoring 150
9.4 Error status register 151
9.5 Alarm notification by text message 152
10 Communication 153
10.1 RS-232 to modem communication module 154
10.2 RS-485 communication module 156
10.3 Description of communication parameter settings 157
10.4 Meter bus 158

10.4.1 Activating the meter bus 158
10.4.2 Flow rate and/or capacity limitation with meter bus 159
10.5 Memory module 161
10.6 Data logging 162
11 Installation 165
12 Electrical connection 167
13 Appendix 168
13.1 Function block lists 168
13.2 Parameter lists 184
13.3 Resistance values 190
13.4 Technical data 191
13.5 Customer setting 192
Service

1 Safety instructions

For your own safety, follow these instructions concerning the mounting, start up and operation of the controller:

– The device is to be mounted, started up or operated only by trained and experienced personnel familiar with the product.
– For electrical installation, you are required to observe the relevant electrotechnical regulations of the country of use as well as the regulations of the local power suppliers. Make sure all electrical connections are installed by trained and experienced personnel! Before performing any such work on the controller, disconnect it from the power supply.
– The device is designed for use in low voltage installations. For wiring and maintenance, you are required to observe the relevant regulations concerning device safety and electromagnetic compatibility.

To avoid damage to any equipment, the following also applies:

– Proper shipping and storage are assumed.
– Before start-up, wait until the controller has reached the ambient temperature.

1.1 Disposal

Waste electrical and electronic equipment may still contain valuable substances. They may also, however, contain harmful substances which were necessary for them to function. For this reason, do not dispose of this kind of equipment together with your household waste. Select a suitable disposal method. Instead, dispose of your waste equipment by handing it over to a designated collection point for the recycling of waste electrical and electronic equipment.

2 Operation

The controller is ready for use with the default temperatures and operating schedules. On start-up, the current time and date need to be set at the controller (see section 2.4).

2.1 Operating controls

The operating controls are located in the front panel of the controller.

2.1.1 Rotary pushbutton

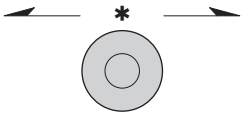

Rotary pushbutton

Turn [↻]:
Select readings, parameters and function blocks

Press [✳]:
Confirm adjusted selection or settings

2.1.2 Rotary switch

The rotary switch is used to set the operating mode and the relevant parameters for each control circuit.

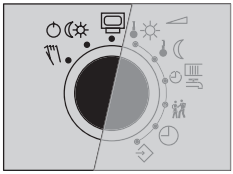

- Operating level
- Operating modes
- Manual level

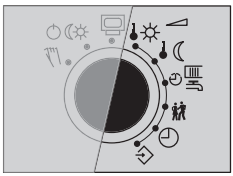

- Day set point (rated room temperature)
- Night set point (reduced room temperature)
- Times-of-use for heating/DHW
- Special time-of-use
- Time/date
- Settings

2.2 Reading information

The display indicates the date, time and actual temperature when the rotary switch is positioned at ▣ (operating level).

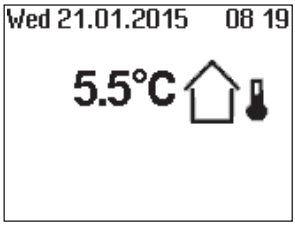

Outdoor-temperature-compensated control
current temperature = outdoor temperature

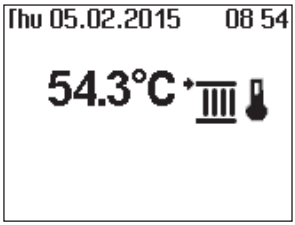

Fixed set point control
current temperature = flow temperature

Further information can be obtained by turning the rotary pushbutton:

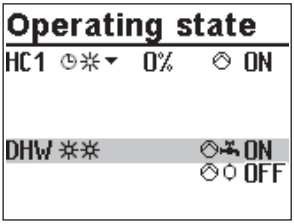

- Operating state

  The following applies for heating circuits HC1, HC2 and HC3:

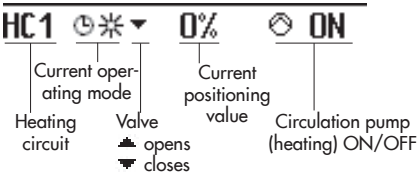

  The following applies for DHW heating:

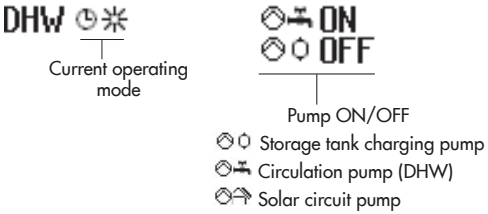

  For further details, see section 2.3.

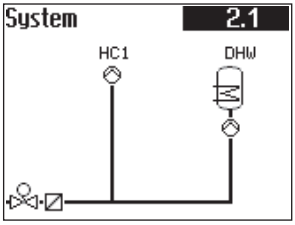

- ↻ Selected system code number
  For further details, see section 3.1.
- ✳ Important measured values of the entire system, e.g. outdoor temperature, flow temperature and return flow temperature, are displayed.

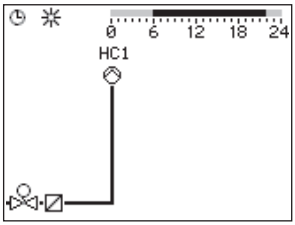

- ↻ Times-of-use (depending on system code number)
  – Heating circuit HC1
  – Heating circuit HC2
  – Heating circuit HC3
  – DHW heating

  The day mode times is highlighted in black on the time chart.
  Night mode and deactivation times are highlighted in gray on the time chart.
  For further details, see section 2.5.
- ✳ Measured values, set points and limits of the system section shown are displayed.

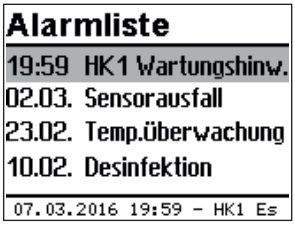

- ↻ Alarm list
  The last four alarm entries are listed.
- ✳ Open the alarm list and select further alarm entries (↻). Further information on an alarm (including time and date when it occurred) runs across the display.

- ↻ Event list
  The last four event entries are listed.
- ✳ Open the event list and select further event entries (↻). Further information on an event (including time and date when it occurred) runs across the display.

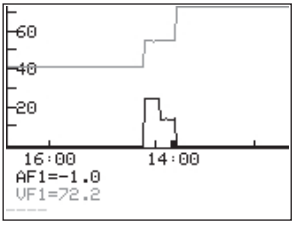

- Trend-Viewer
  The standard graph shows the data measured at the outdoor sensor AF1 and flow sensor VF1 plotted over time.
  For further details, see section 2.2.1.

Note:
*Details on the meter bus and controller version (device identification, serial number, software and hardware versions) are displayed in the **extended operating level**.*

Turn the rotary switch to ⚙ (settings).

- Enter key number 1999.

✳ Confirm key number.

Turn the rotary switch to ▣ (operating level).

- Select 'Information'.

2.2.1 Adapting the Trend-Viewer

The standard graph shows the data measured at the outdoor sensor AF1 and flow sensor VF1 plotted over time.

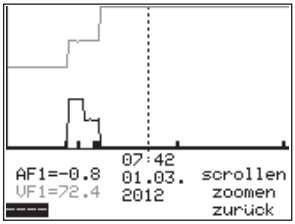

✳ Open the Trend-Viewer.

Adding measuring data

() Select – – – – on the display.

✳ Activate editing mode for sensor selection.

() Select sensor.

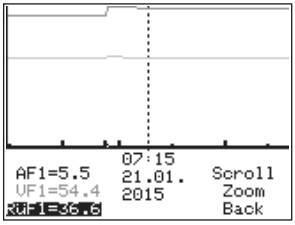

✳ Confirm selected sensor.

Deleting measured data:

() Select the sensor whose measured data are no longer to be displayed.

✳ Activate editing mode for sensor.

() Select – – – – on the display.

✳ Confirm deletion.

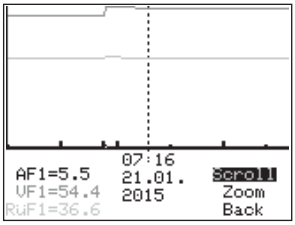

Shifting the time line:

() Select 'Scroll'.

✳ Activate editing mode for scroll function.

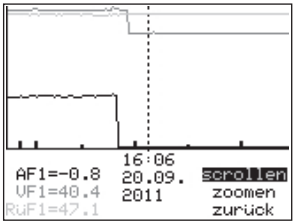

() Shift the time line.

✳ Confirm time display.

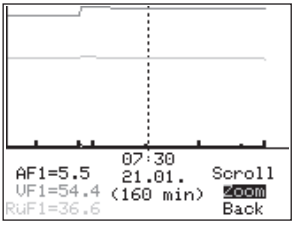

Zooming in/out

- Select 'Zoom'.
- Open zoom function.
- Zoom in or out.

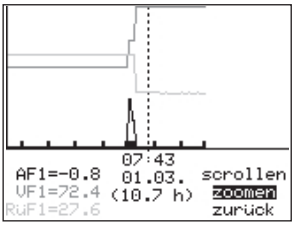

- Confirm display.

Closing the Trend-Viewer

- Select 'Back'.
- Close the Trend-Viewer

2.3 Selecting operating modes

Day mode (rated operation): regardless of the programmed times-of-use and summer mode, the set points relevant for rated operation are used by the controller. Icon: ☼☼

Night mode (reduced operation): regardless of the programmed times-of-use, the set points relevant for reduced operation are used by the controller. Icon: ☽ ☽

Control operation deactivated: regardless of the programmed times-of-use, control operation of the heating circuits and DHW heating remains deactivated. The frost protection is activated, if need be. Icon: ⏻ ⏻
Icons when the frost protection is activated: HC ⏻ ☽, DHW ⏻ ☼

Automatic mode: during the programmed times-of-use, the controller works in day mode. Outside these times-of-use, the controller is in night mode, unless control operation is deactivated depending on the outdoor temperature. The controller switches automatically between both operating modes. Icon within the times-of-use: ◷☼, icon outside the times-of-use: ◷ ☽

Manual mode: valves and pumps can be controlled manually. For further details, see section 4.

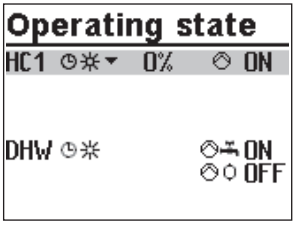

Turn the rotary switch to ⏲☾☼ (operating modes). The operating states of all system control circuits are displayed:

– Heating circuit HC1
– Heating circuit HC2
– Heating circuit HC3
– DHW heating

➔ Only those control circuits are available for selection which can be controlled by the selected system.

↻ Select the control circuit.

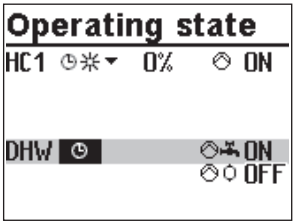

✳ Activate editing mode for the control circuit. The operating mode is shown inverted on the display.

↻ Select the operating mode:
- Automatic mode
- Day mode
- Night mode
- System deactivated

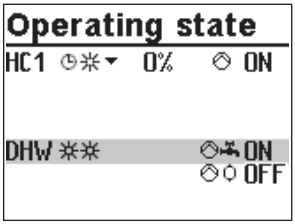

✳ Confirm the operating mode.

2.4 Setting the time and date

The current time and date need to be set immediately after start-up and after a power failure lasting more than 24 hours. This is the case when the time blinks on the display.

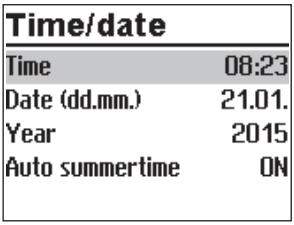

Turn the rotary switch to ◴ (time/date). The current time is selected (gray background).

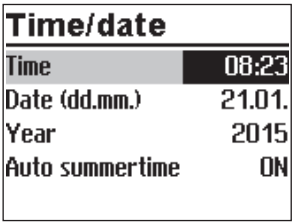

- ✳ Activate editing mode for the time. The time reading is inverted.
- ↻ Change the time.
- ✳ Confirm the time setting.

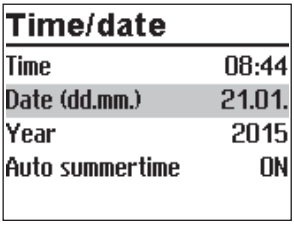

- ↻ Select 'Date' (dd.mm) [↻].

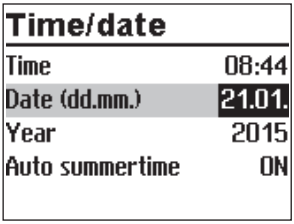

- ✳ Activate editing mode for the date. The date reading is inverted.
- ↻ Change date (day.month).
- ✳ Confirm the date setting.

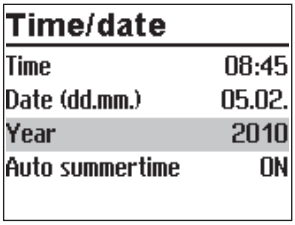

↻ Select 'Year'.

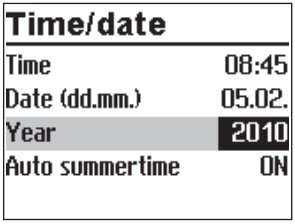

✳ Activate editing mode for the year. The year reading is inverted.

↻ Change the year.

✳ Confirm the year setting.

Deactivate or activate the automatic summer/standard time switchover as required. See section 8.1:

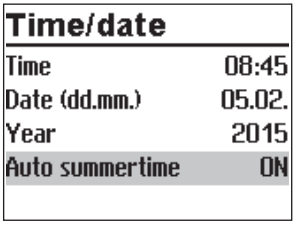

↻ Select 'Auto summertime'.

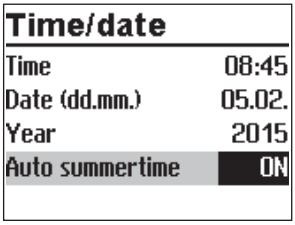

✳ Activate the editing mode for automatic summer/standard time switchover. The current setting is shown inverted on the display:
ON = Summer/standard time switchover active
OFF = Summer/standard time switchover not active

↻ Deactivate or activate the automatic summer/standard time switchover.

✳ Confirm deactivation/activation.

Turn the rotary switch back to ⎚ (operating level).

Note:
The correct time is guaranteed after a power failure of 24 hours. Normally, the correct time is still retained at least 48 hours after a power failure.

2.5 Setting the times-of-use

Three times-of-use can be set for each day of the week.

Parameters	WE		Value range
	HC1, HC2, HC3	DHW, CP	
Start first time-of-use	06:00	00:00	00:00 to 24:00 h in steps of 15 minutes
Stop first time-of-use	22:00	24:00	
Start second time-of-use	--:--	--:--	
Stop second time-of-use	--:--	--:--	
Start third time-of-use	--:--	--:--	
Stop third time-of-use	--:--	--:--	

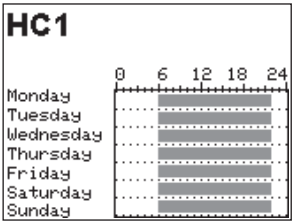

Turn the rotary switch to (times-of-use). The first control circuit is displayed together with its programmed times-of-use.

- Program the times-of-use of another control circuit, if required:
  – Heating circuit HC2
  – Heating circuit HC3
  – DHW heating
  – Circulation pump (DHW) CP

➔ Only those control circuits are available for selection which can be controlled by the selected system.

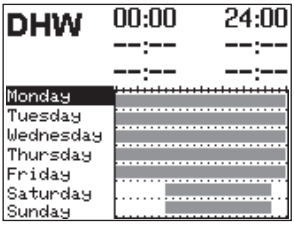

✳ Activate editing mode for the control circuit. The times-of-use for Monday are displayed.

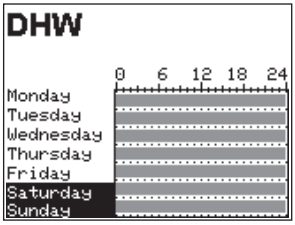

↺ Select period/day for which the times-of-use are to be valid. The times-of-use can be programmed for individual days or for a block of days, e.g. Monday to Friday, Saturday and Sunday or Monday to Sunday. The selected days are shown inverted on the display.

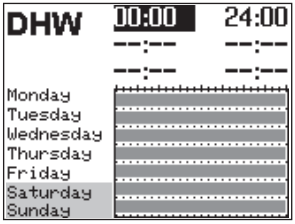

✳ Activate editing mode for the period/day.
The start time of the first time-of-use period can now be edited (inverted reading).

↺ Change start time.(in steps of 15 minutes)

✳ Confirm the start time.The stop time of the first time-of-use period can now be edited.

↺ End stop time (in steps of 15 minutes).

✳ Confirm the stop time.The start time of the second time-of-use period can now be edited.

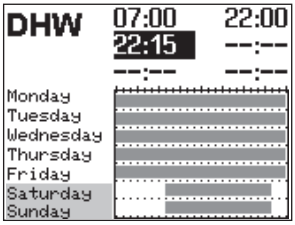

To set the second and third times-of-use periods, repeat steps with gray background. If no further times-of-use are to be programmed for the selected time period/day, exit the menu by confirming the indicated start time twice (2x ✳).

Proceed in the same manner to program further periods/ days.

After setting all times-of-use:

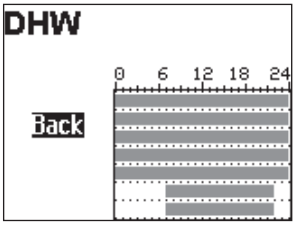

↺ Select 'Back'.

✳ Exit the times-of-use setting.

Turn the rotary switch back to ⎙ (operating level).

2.6 Setting special times-of-use

2.6.1 Party timer

Rated operating in the corresponding control circuit (HC1, HC2, HC3 or DHW) is started or continued for the time period set in the party mode. When the party timer has elapsed, the party timer returns to --:--.

Parameters	WE	Value range
HC1 party timer	--:-- h	0 to 48 h; in steps of 15 minutes
HC2 party timer	--:-- h	0 to 48 h; in steps of 15 minutes
DHW party timer	--:-- h	0 to 48 h; in steps of 15 minutes

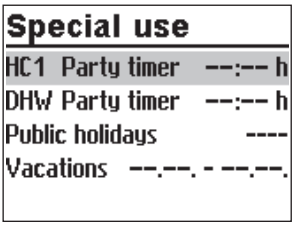

Turn the rotary switch to (special times-of-use). The party timer for the first control circuit is now selected.

↺ Set time for party mode of another control circuit, if required:
– Heating circuit HC2
– Heating circuit HC3
– DHW heating

➔ Only those control circuits are available for selection which can be controlled by the selected system.

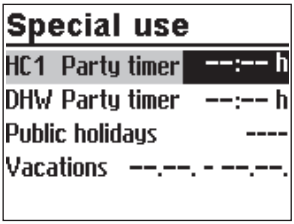

✳ Activate editing mode for the party timer. The party timer is now in the editing mode (inverted display).

↺ Extend day operation as required (in steps of 15 minutes).

∗ Confirm setting.

After setting the party timer:

Turn the rotary switch back to 🖵 (operating level).

Note:
Party timer runs down in steps of 15 minutes.

2.6.2 Public holidays

On public holidays, the times-of-use specified for Sunday apply.

A maximum of 20 public holidays may be entered.

Parameters	WE	Value range
Public holidays	--:--	01.01 to 31.12

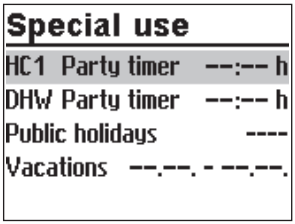

Turn the rotary switch to 🏖 (special times-of-use). The party timer for the first control circuit is now selected.

↺ Select 'Public holidays'.

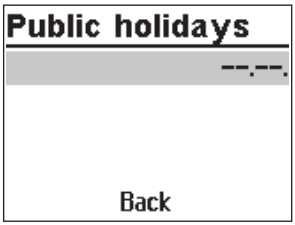

∗ Start the public holiday setting. The first public holiday setting is now selected. --:-- is displayed if no public holidays (default setting) have been programmed.

↺ Select --:--, if applicable.

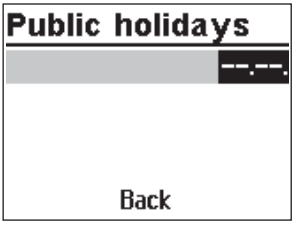

∗ Activate editing mode for public holidays.

❍ Set the date of the public holiday.

∗ Confirm the date.

Proceed in the same manner to program further public holidays.

Deleting a public holiday:

❍ Select the holiday you wish to delete.

∗ Confirm the date.

❍ Select --:--.

∗ Confirm setting.
The public holiday is deleted.

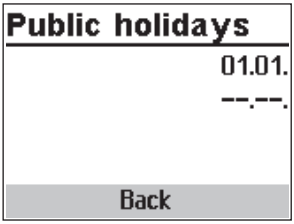

After programming all public holidays:

❍ Select 'Back'.

∗ Exit the public holiday setting.

Turn the rotary switch back to ⎙ (operating level).

Note:
Public holidays that are not assigned to a specific date should be deleted by the end of the year so that they are not carried on into the following year.

2.6.3 Vacations

The system runs constantly in reduced mode during vacation periods. A maximum of ten vacation periods can be entered. Each vacation period can be separately assigned to the heating circuits HC1, HC2, HC3 and DHW circuit or to all control circuits.

Parameters	WE	Value range
Vacation period	--.-- - --.--	01.01 to 31.12

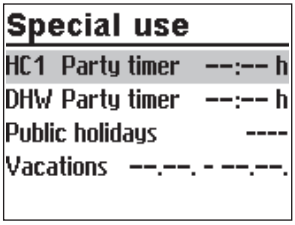

Turn the rotary switch to (special times-of-use). The party timer for the first control circuit is now selected.

- Select 'Vacations'.

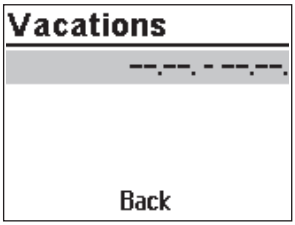

- Start the vacations setting. The first vacations setting is now selected. --.-- - --.--.is displayed if no vacations (default setting) have been programmed.
- Select --.-- - --.--, if applicable.

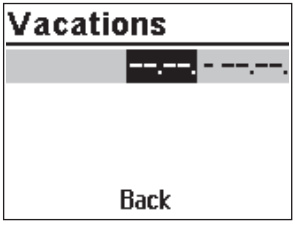

- Activate editing mode for vacations.
  The start date can now be edited (inverted reading).
- Set the start date.
- Confirm the start date.
  The end date can now be edited.
- Set the end date.

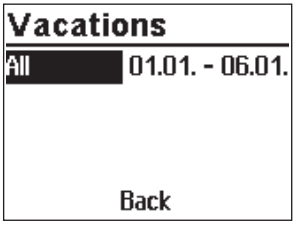

- Confirm the year setting. 'All' is selected. The vacation period then applies to all control circuits.
- If the vacation period is to be only valid for one control circuit, select the required control circuit:
  – Heating circuit HC1
  – Heating circuit HC2
  – Heating circuit HC3
  – DHW heating

➔ Only those control circuits are available for selection which can be controlled by the selected system.

- Confirm the control circuit.

Proceed in the same manner to program further vacations.

Deleting vacation periods:

- ↻ Select the start date of the period you wish to delete.
- ✳ Confirm vacation period.
- ↻ Select --.-- - --.--.
- ✳ Confirm setting.
  The vacation period is deleted.

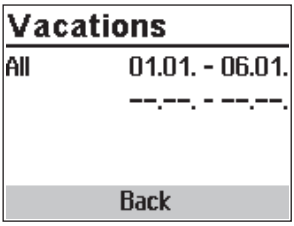

After programming all vacation periods:

- ↻ Select 'Back'.
- ✳ Exit the vacations setting.

Turn the rotary switch back to 🖵 (operating level).

Note:
Vacations should be deleted by the end of the year so that they are not carried on into the following year.

2.7 Entering day and night set points

The desired room temperature for the day and night set points can be programmed.

Switch position 🌡☼

Parameters	WE	Value range
HC1 room temperature	20.0 °C	0.0 to 40.0 °C
HC2 room temperature	20.0 °C	0.0 to 40.0 °C
HC3 room temperature	20.0 °C	0.0 to 40.0 °C
DHW temperature	55.0 °C	Min. to max. DHW temperature
HC1 OT deactivation value	22.0 °C	0.0 to 50.0 °C
HC2 OT deactivation value	22.0 °C	0.0 to 50.0 °C
HC3 OT deactivation value	22.0 °C	0.0 to 50.0 °C

Switch position 🌡☾

Parameters	WE	Value range
HC1 room temperature	15.0 °C	0.0 to 40.0 °C
HC2 room temperature	15.0 °C	0.0 to 40.0 °C

HC3 room temperature	15.0 °C	0.0 to 40.0 °C
DHW temperature	40.0 °C	Min. to max. DHW temperature
HC1 OT deactivation value	15.0 °C	–50.0 to 50.0 °C
HC2 OT deactivation value	15.0 °C	–50.0 to 50.0 °C
HC3 OT deactivation value	15.0 °C	–50.0 to 50.0 °C

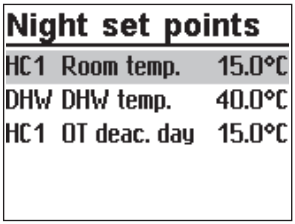

Turn the rotary switch to 🌡☼ (day set point) or 🌡☾ (night set point).

The day or night set points are listed on the display.

➔ Only those day and night set points are available for selection which can be controlled by the selected system.

Note:
The deactivation values are located in a separate menu (deactivation values) for systems with three control circuits.

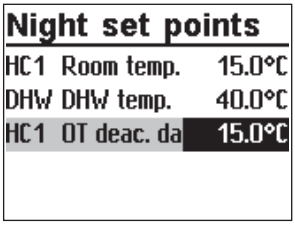

↻ Select the set point.

✳ Activate editing mode for set point.

↻ Adjust the set point.

✳ Confirm setting.

Proceed in the same manner to adjust further set points.

After adjusting all the set points:

Turn the rotary switch back to 🖳 (operating level).

3 Start-up

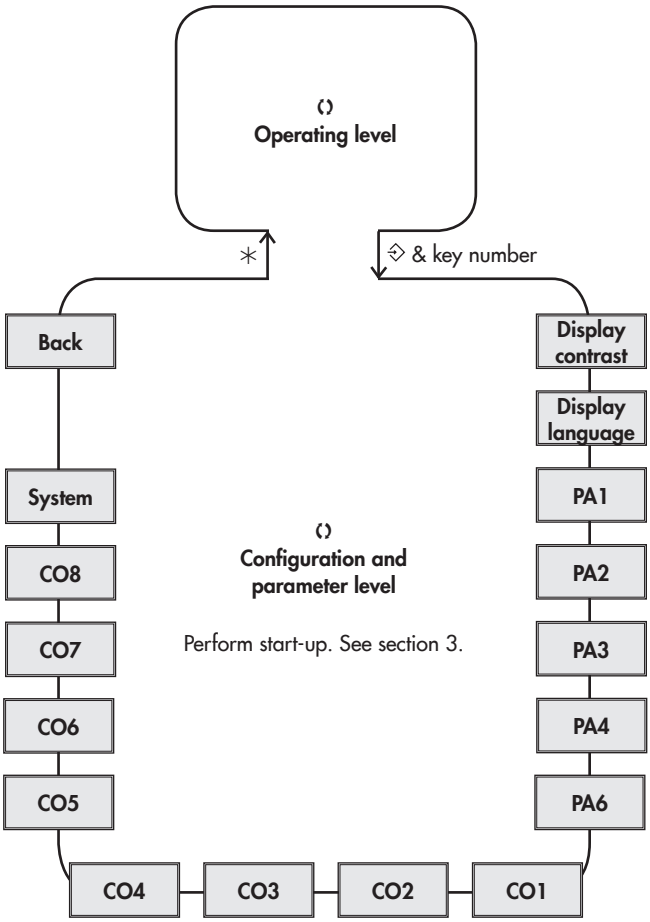

PA1/CO1: RK1 (heating circuit 1)
PA2/CO2: RK2 (heating circuit 2)
PA3/CO3: RK3 (heating circuit 3)
PA4/CO4: DHW circuit

CO5 System-wide
PA6/CO6: Communication
CO7: Device bus
CO8: Binary inputs
Anl: System code number

Fig. 1: *Level structure of TROVIS 5578*

The modifications of the controller configuration and parameter settings described in this section can only be performed after the valid key number has been entered.

The key number that is valid on the first start-up can be found on page 209. To avoid unauthorized use of the service key number, remove the page or make the key number unreadable. In addition, it is possible to enter a new, customized key number (see section 8.21).

3.1 Setting the system code number

Different hydraulic schematics are available. Each system configuration is represented by a system code number. The different schematics are dealt with in section 5. Available controller functions are described in sections 6, 7 and 8.

Changing the system code number resets previously adjusted function blocks to their default settings (WE). Function block parameters and parameter level settings remain unchanged. The system code number is set in the configuration and parameter level.

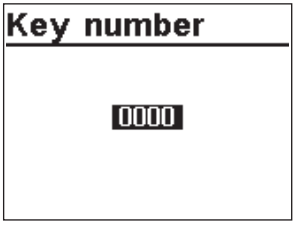

Turn the rotary switch to ⚙ (settings).

↻ Enter the currently valid key number.

✳ Confirm key number.

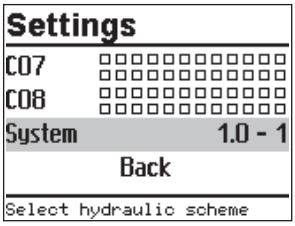

↻ Select 'System'.

✳ Open 'System'.

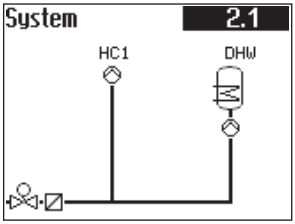

↻ Select the required system.

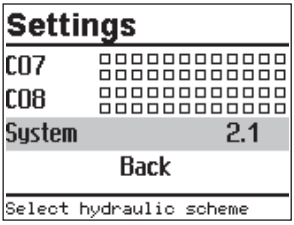

∗ Confirm the system selected.

() Select 'Back'.

∗ Exit menu.

Turn the rotary switch to ⚙ (settings).

3.2 Activating and deactivating functions

A function is activated or deactivated in the associated function block. For more details on function blocks, see section 13.1.

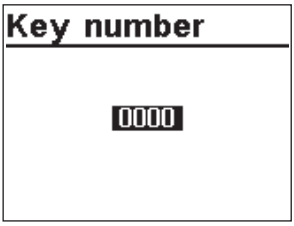

Turn the rotary switch to ⚙ (settings).

() Enter the currently valid key number.

∗ Confirm key number.

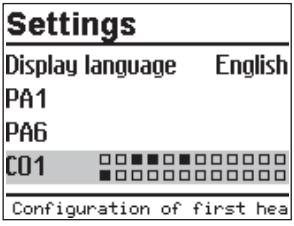

() Select the required configuration level:
- CO1: Heating circuit HC1
- CO2: Heating circuit HC2
- CO3: Not applicable
- CO4: DHW heating
- CO5: System-wide functions
- CO6: Modbus communication

Active function blocks are indicated by the black squares.

➔ Only those configuration levels are available for selection which can be controlled by the selected system.

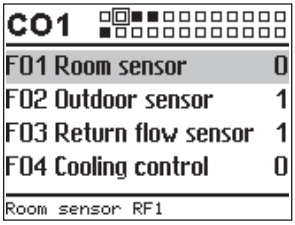

∗ Open configuration level.
The first function block is selected (marked gray).

↺ Select function.

Functions without function block parameters:

∗ Activate editing mode for the function.
The currently active configuration '0' or '1' is shown inverted on the display.

↺ Activate function (1) or deactivate function (0).

∗ Confirm configuration.

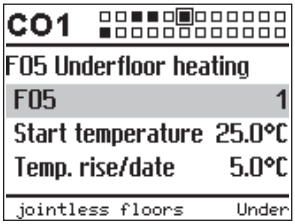

Functions with function block parameters:

∗ Open function.

↺ Select configuration.

∗ Activate editing mode for configuration.
The currently active configuration '0' or '1' is shown inverted on the display.

↺ Activate function (1) or deactivate function (0).

∗ Confirm configuration.

↺ Select function block parameter.

∗ Activate editing mode for function block parameter.
The current setting is shown inverted on the display.

↺ Set function block parameter.

Proceed in the same manner to set further function blocks.

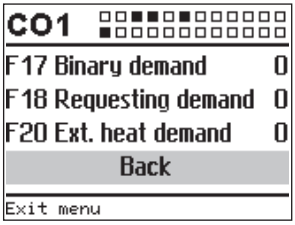

Exit configuration level:

↺ Select 'Back'.

↺ Exit configuration level.

To adjust further function blocks in other configuration levels, repeat steps with gray background.

Turn the rotary switch back to ⎚ (operating level).

3.3 Changing parameters

Depending on the system code number selected and the activated functions, not all parameters listed in section 13.2 might be available.

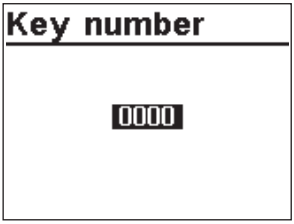

Turn the rotary switch to ⚙ (settings).

- ↻ Enter the currently valid key number.
- ✳ Confirm key number.

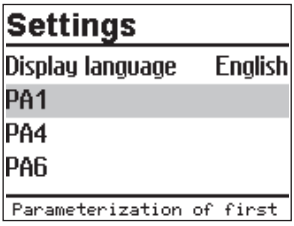

- ↻ Select the required parameter level:
  – PA1: Heating circuit HC1
  – PA2: Heating circuit HC2
  – PA3: Not applicable
  – PA4: DHW heating
  – PA5: Not applicable
  – PA6: Modbus communication
- ➔ Only those parameter levels are available for selection which can be controlled by the selected system.

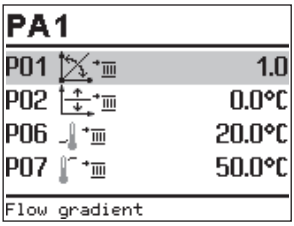

- ✳ Open parameter level.
  The first parameter is selected (marked gray).

- ↻ Select parameter.
- ✳ Activate editing mode for the parameter.
  The current setting is shown inverted on the display.
- ↻ Set the parameter.
- ✳ Confirm setting.
- ✳ Proceed in the same manner to change further parameters.

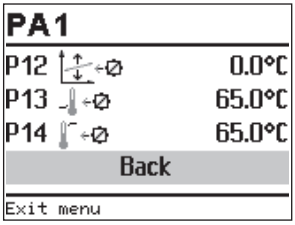

Exit parameter level.

- Select 'Back'.
- Exit configuration level.

To adjust further function blocks in other configuration levels, repeat steps with gray background.

Turn the rotary switch back to (operating level).

3.4 Calibrating sensors

The controller is designed for connection of Pt 1000, PTC and Ni 1000 sensors.

- CO5 > F01 - 1, F02 - 0: Pt 1000
- CO5 > F01 - 0, F02 - 0: PTC
- CO5 > F01 - 1, F02 - 1: Ni 1000

The resistance values are listed on page 195.

If the temperature values displayed at the controller differ from the actual temperatures, the measured values of all connected sensors can be recalibrated. To calibrate a sensor, the currently displayed sensor value must be changed such that it matches the temperature (reference temperature) measured directly at the point of measurement. Sensor calibration is activated in CO5 in F20 function block.
An incorrect sensor calibration can be deleted by setting F20 - 0.

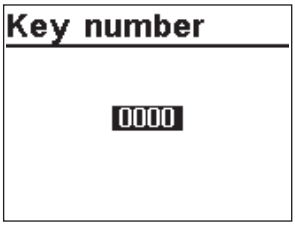

Turn the rotary switch to (settings).

- Enter the currently valid key number.
- ✳ Confirm key number.

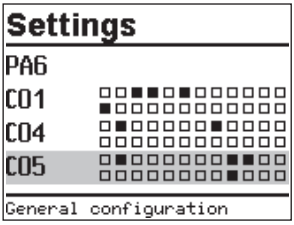

- ✳ Select CO5 configuration level.
- ✳ Open CO5 configuration level.
- ✳ Select F20 function block.
- ✳ Activate editing mode for F20 function block.

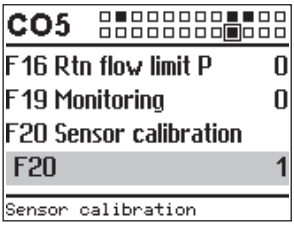

- ↻ Select F20 configuration.
- ✳ Activate editing mode for configuration.
  The currently active configuration '0' or '1' is shown inverted on the display.
- ↻ Activate function block ('1').
- ✳ Confirm activation.

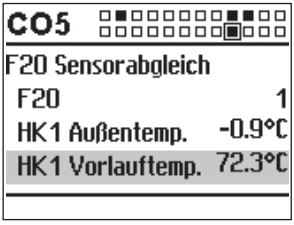

- ✳ Select the temperature that you want to calibrate.
- ✳ Open calibration.
  The temperature is shown inverted on the display.
- ✳ Correct measured value.
  Read the actual temperature directly from the thermometer at the point of measurement and enter this value as the reference temperature.
- ✳ Confirm corrected measured value.
- ✳ Proceed in the same manner to calibrate further sensors.

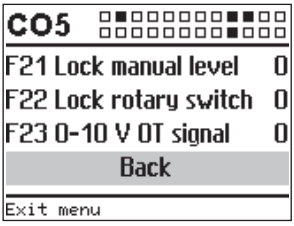

Exit configuration level:

- ↻ Select 'Back'.
- ↻ Exit configuration level.

Turn the rotary switch back to ⎙ (operating level).

3.5 Altering the display contrast

You can alter the contrast of the display.

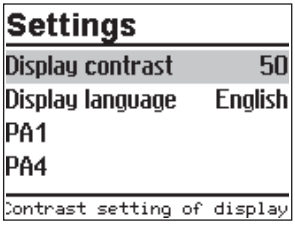

Turn the rotary switch to ⟐ (settings).

- ( ) Enter the currently valid key number.
- ∗ Confirm key number.
- ( ) Select 'Display contrast'.
- ∗ Activate editing mode for the display contrast.
  The current setting is shown inverted on the display.
- ( ) Set the display contrast
- ∗ Confirm setting.

Turn the rotary switch back to ⊟ (operating level).

3.6 Changing the display language

The default display language is German. The setting can be changed to English.

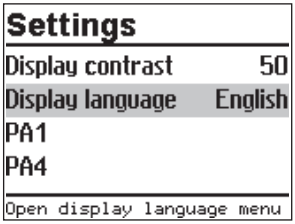

Turn the rotary switch to ⟐ (settings).

- ( ) Enter the currently valid key number.
- ∗ Confirm key number.
- ( ) Select 'Display language'.
- ∗ Activate editing mode for the language setting.
  The currently valid language is selected.
- ( ) Change language setting.
- ∗ Confirm setting.

Turn the rotary switch back to ⊟ (operating level).

3.7 Loading default setting

All parameters set over the rotary switch as well as parameters in the PA1 and PA2 parameter levels can be reset to their default settings (WE). except for the maximum flow temperature and the return flow temperature limits in PA1 and PA2.

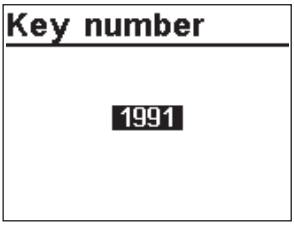

Turn the rotary switch to ⚙ (settings).

↻ Enter key number 1991.

✳ Confirm key number.
The settings are reset when the following icon appears on the controller display:

4 Manual mode

Switch to manual mode to configure all outputs (see section 12).

NOTICE
The frost protection does not function when the controller is in manual mode.

Manually changing the positioning value/switching state:

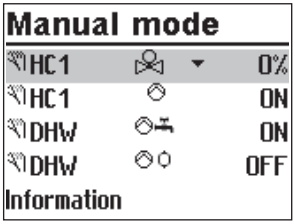

Turn the rotary switch to (manual mode). The outputs of the configured system are listed on the display.

- Select the output
  - Positioning value
  - Circulation pump (heating)
  - Storage tank charging pump
  - Circulation pump (DHW)
  - Solar circuit pump
- Activate editing mode for the output.
- Change the positioning value/switching state.
- Confirm the positioning value/switching state.
  The modified values remain active as long as the controller is in manual mode.

Turn the rotary switch to (operating level). The manual mode is deactivated.

Note:
The outputs of the controller are not affected by merely turning the rotary switch to (manual mode). The outputs are only changed by entering or changing the positioning values or switching states.

5 Systems

Different hydraulic schematics are available. The system images on the display show the structure of the hydraulic system.

Boiler systems:

Single-stage boiler systems can be configured to include any system whose heating circuits and DHW circuit include just one heat exchanger. These systems are Anl 1.0-1, 1.5-1, 1.6-1, 1.6-2, 1.7-1, 1.8-1, 1.8-2, 1.9, 2.x, 3.x, 4.x, 5.x, 6.0, 7.x, 8.x, 9.x, 11.1-3, 14.x, 15.x and 16.x.

The boiler can be controlled by an on/off output (CO1 > F12 - 0).

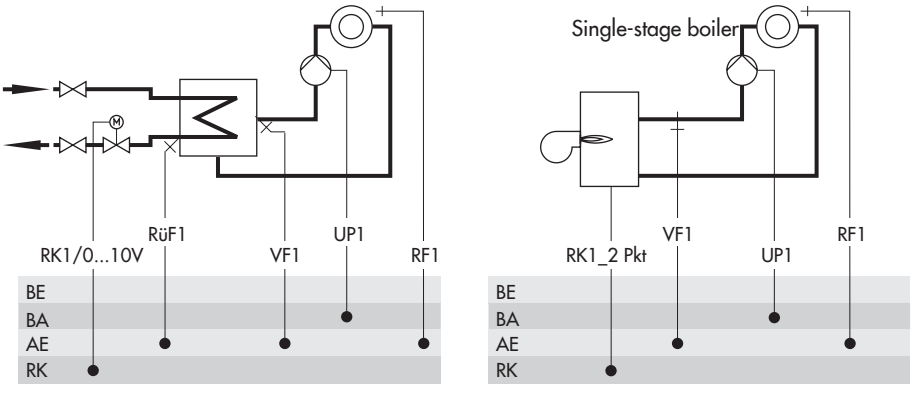

Fig. 2: *Configuration of a boiler system*

System Anl 1.0-1

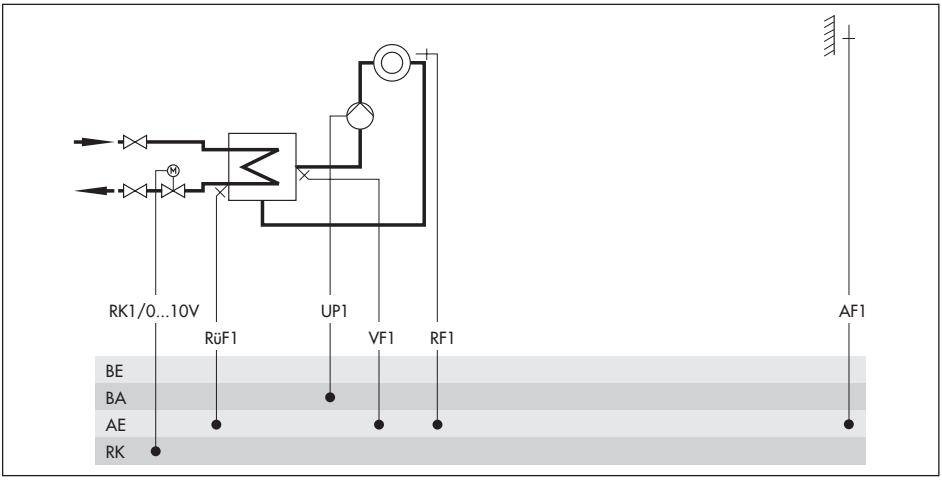

System	1.0-1
	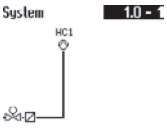
Default setting	**1.0-1**
CO1 > F01	- 0 (without RF1)
CO1 > F02	- 1 (with AF1)
CO1 > F03	- 1 (with RüF1)
CO5 > F07	- 0 (without error message at terminal 43)

System Anl 1.0-2

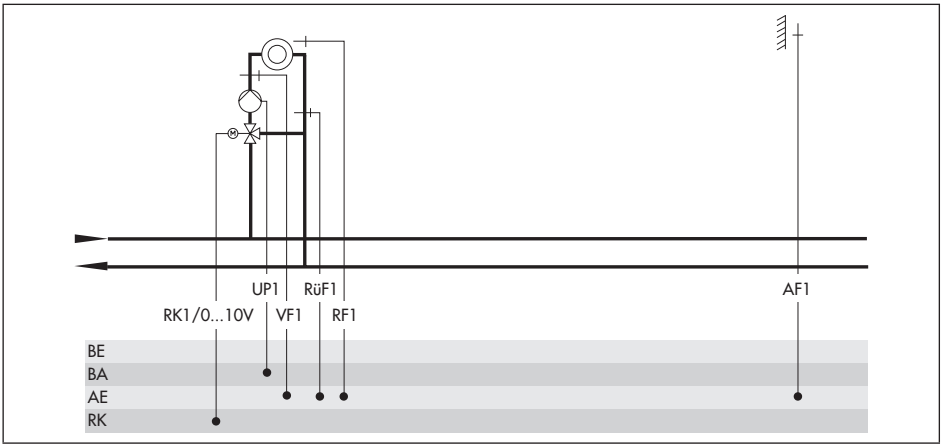

System	1.0-2
	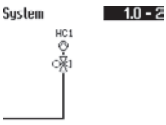
Default setting	
CO1 > F01	- 0 (without RF1)
CO1 > F02	- 1 (with AF1)
CO1 > F03	- 1 (with RüF1)
CO5 > F07	- 0 (without error message at terminal 43)

Systems Anl 1.1-1 and 1.3-1

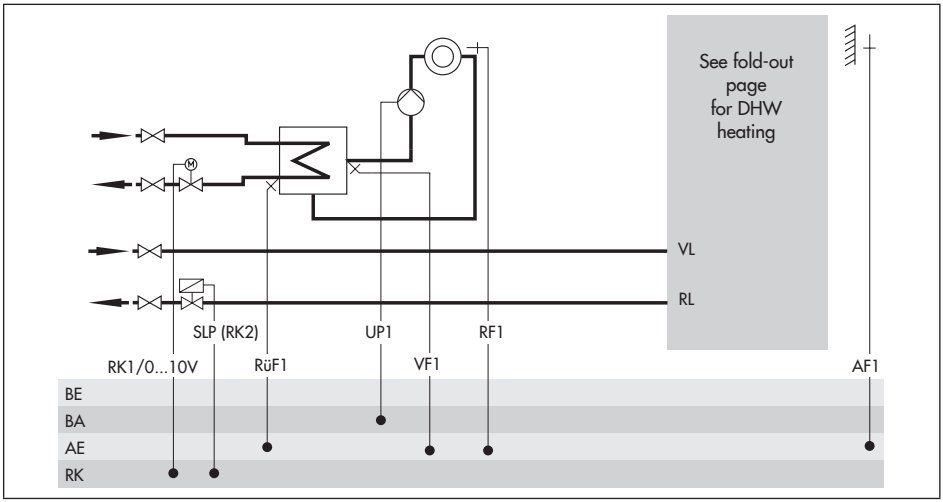

System	1.1-1	1.3-1
	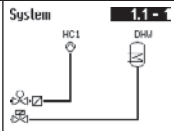	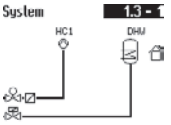
DHW type	1	3
Integration of VF4	Possible	Possible
Default setting		
CO1 > F01	- 0 (without RF1)	- 0 (without RF1)
CO1 > F02	- 1 (with AF1)	- 1 (with AF1)
CO1 > F03	- 0 (without RüF1)	- 0 (without RüF1)
CO4 > F01	- 1 (with SF1)	- 1 (with SF1)
CO4 > F02	- 0 (without SF2)	- 0 (without SF2)
CO4 > F05	- 0 (without VF4)	- 0 (without VF4)
CO5 > F07	- 0 (without error message at terminal 43)	- 0 (without error message at terminal 43)

Systems Anl 1.1-2, 1.2, 1.3-2 and 1.4

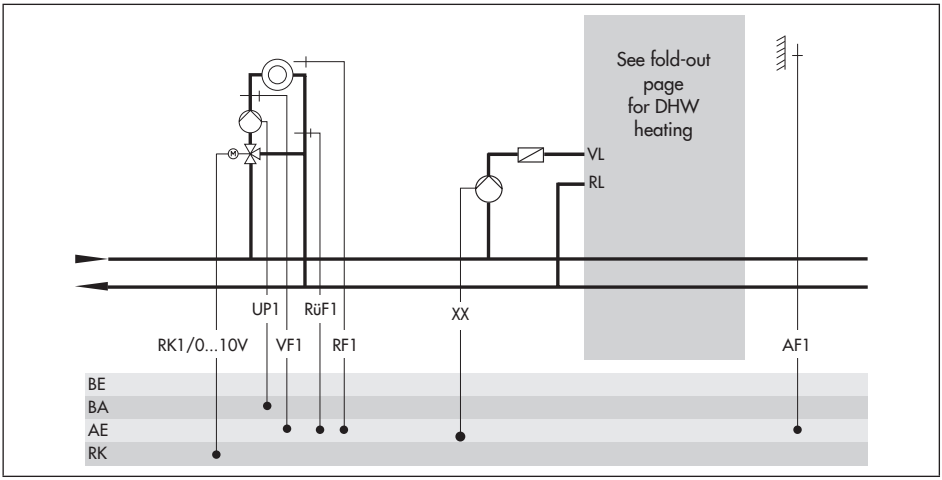

System	1.1-2	1.2	1.3-2	1.4
	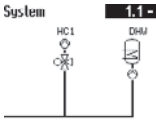	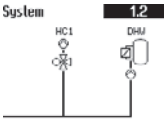	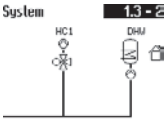	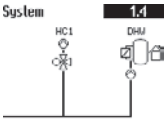
DHW type	1	2	3	4
XX =	SLP	UP2	SLP	UP2
Integration of VF4	Possible	Possible	Possible	Possible
ZP integration (broken line)	–	Not possible	–	Not possible
Default setting				
CO1 > F01	- 0 (without RF1)	- 0 (without RF1)	- 0 (without RF1)	- 0 (without RF1)
CO1 > F02	- 1 (with AF1)	- 1 (with AF1)	- 1 (with AF1)	- 1 (with AF1)
CO1 > F03	- 0 (without RüF1)	- 0 (without RüF1)	- 0 (without RüF1)	- 0 (without RüF1)
CO4 > F01	- 1 (with SF1)	- 1 (with SF1)	- 1 (with SF1)	- 1 (with SF1)
CO4 > F02	- 0 (without SF2)	- 1 (with SF2)	- 0 (without SF2)	- 0 (without SF2)
CO4 > F05	- 0 (without VF4)	- 0 (without VF4)	- 0 (without VF4)	- 0 (without VF4)
CO5 > F07	- 0 (without error message at terminal 43)	- 0 (without error message at terminal 43)	- 0 (without error message at terminal 43)	- 0 (without error message at terminal 43)

Systems Anl 1.5-1, 1.6-2, 1.7-1 and 1.8-2

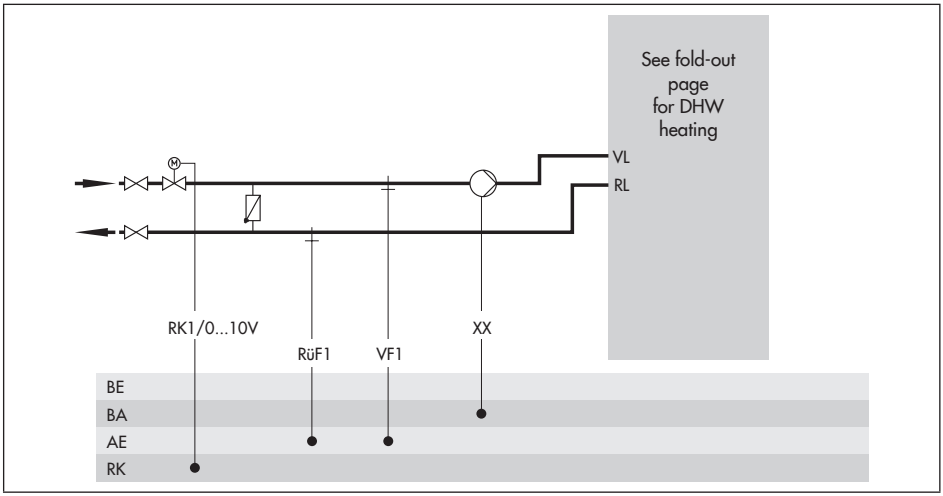

System	1.5-1	1.6-2	1.7-1	1.8-2
	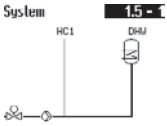	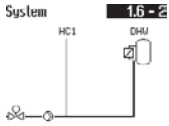	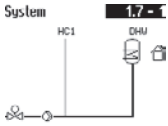	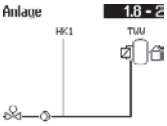
DHW type	1	2	3	4
XX =	SLP	UP1	SLP	UP1
Integration of VF4	Not possible	Possible	Not possible	Possible
ZP integration (broken line)	–	Possible	–	Possible
Default setting				
CO1 > F03	- 1 (with RüF1)	- 1 (with RüF1)	- 1 (with RüF1)	- 1 (with RüF1)
CO4 > F01	- 1 (with SF1)	- 1 (with SF1)	- 1 (with SF1)	- 1 (with SF1)
CO4 > F02	- 0 (without SF2)	- 1 (with SF2)	- 0 (without SF2)	- 1 (with SF2)
CO4 > F05		- 0 (without VF4)		- 0 (without VF4)
CO5 > F07	- 0 (without error message at terminal 43)	- 0 (without error message at terminal 43)	- 0 (without error message at terminal 43)	- 0 (without error message at terminal 43)

Systems Anl 1.5-2, 1.6-3, 1.7-2 and 1.8-3

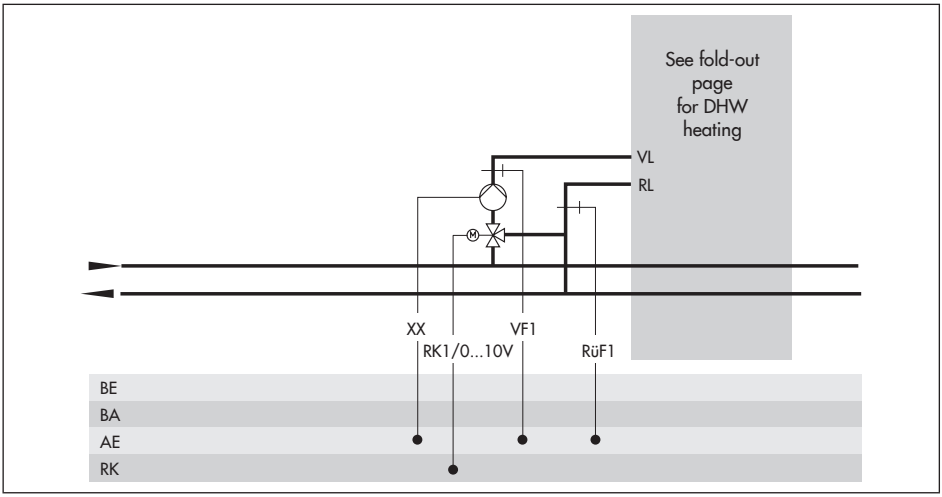

System	1.5-2	1.6-3	1.7-2	1.8-3
	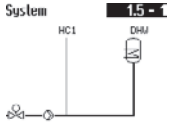	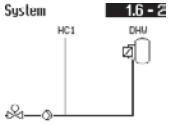	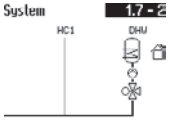	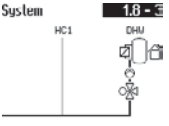
DHW type	1	2	3	4
XX =	SLP	UP1	SLP	UP1
Integration of VF4	Not possible	Possible	Not possible	Possible
ZP integration (broken line)	–	Possible	–	Possible
Default setting				
CO1 > F03	- 1 (with RüF1)	- 1 (with RüF1)	- 1 (with RüF1)	- 1 (with RüF1)
CO4 > F01	- 1 (with SF1)	- 1 (with SF1)	- 1 (with SF1)	- 1 (with SF1)
CO4 > F02	- 0 (without SF2)	- 1 (with SF2)	- 0 (without SF2)	- 1 (with SF2)
CO4 > F05		- 0 (without VF4)		- 0 (without VF4)
CO5 > F07	- 0 (without error message at terminal 43)	- 0 (without error message at terminal 43)	- 0 (without error message at terminal 43)	- 0 (without error message at terminal 43)

Systems Anl 1.6-1 and 1.8-1

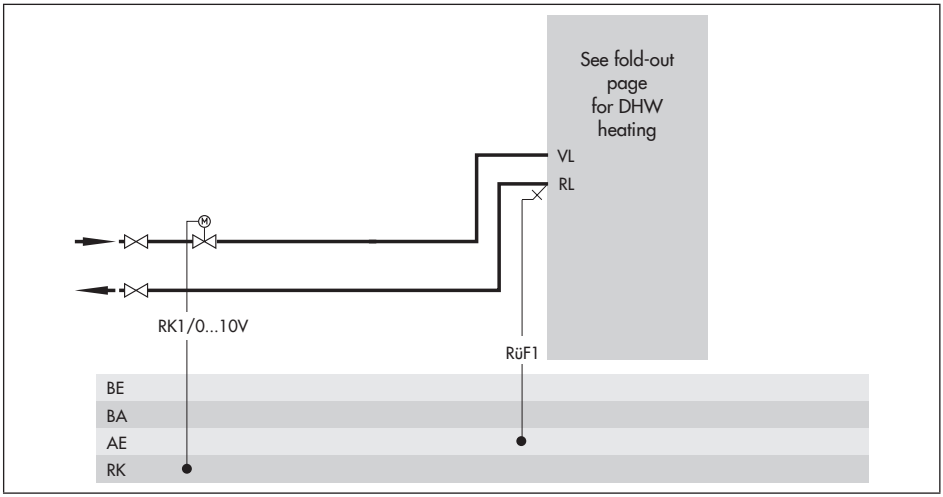

System	1.6-1	1.8-1
	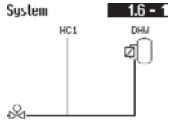	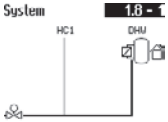
DHW type	2	4
Integration of VF4	Not possible VF1 takes on the position of VF4	Not possible VF1 takes on the position of VF4
ZP integration (broken line)	Possible	Possible
Note	Install RüF1 in the heat exchanger	Install RüF1 in the heat exchanger
Default setting		
CO1 > F03	- 1 (with RüF1)	- 1 (with RüF1)
CO4 > F01	- 1 (with SF1)	- 1 (with SF1)
CO4 > F02	- 1 (with SF2)	- 1 (with SF2)
CO4 > F05		
CO5 > F07	- 0 (without error message at terminal 43)	- 0 (without error message at terminal 43)

Systems Anl 1.9-1 and 1.9-2

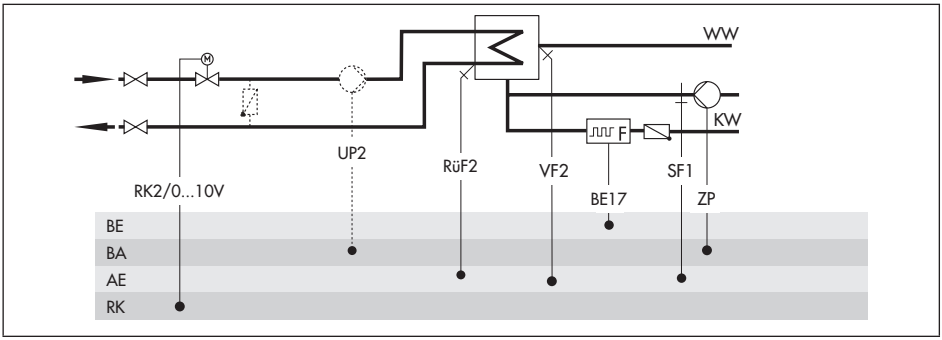

System	1.9-1	1.9-2
	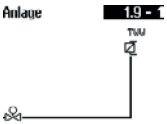	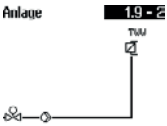
Default setting		
CO4 > F01	- 0 (without SF1)	- 0 (without SF1)
CO4 > F03	- 0 (without RüF2)	- 0 (without RüF2)
CO4 > F04	- 0 (without flow rate sensor)	- 0 (without flow rate sensor)
CO5 > F07	- 0 (without error message at terminal 37)	- 0 (without error message at terminal 37)

System Anl 2.0

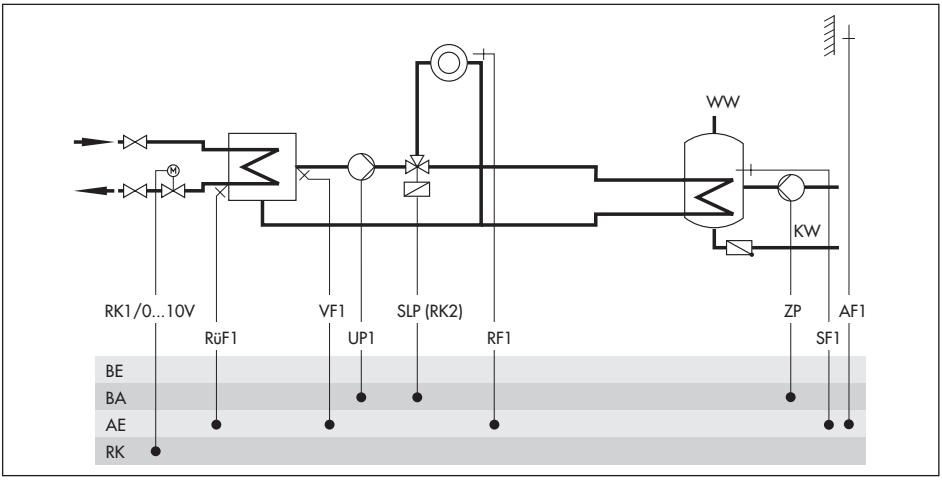

System	2.0
	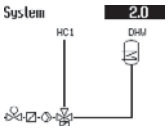
Default setting	
CO1 > F01	- 0 (without RF1)
CO1 > F02	- 1 (with AF1)
CO1 > F03	- 1 (with RüF1)
CO4 > F01	- 1 (with SF1)
CO4 > F02	- 0 (without SF2)
CO5 > F07	- 0 (without error message at terminal 43)

Systems Anl 2,1, 2.2, 2.3 and 2.4

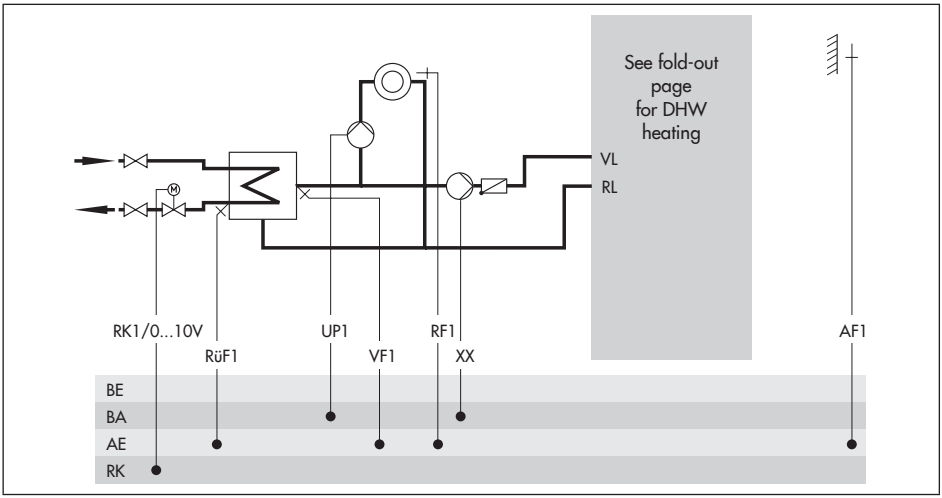

System	2.1	2.2	2.3	2.4
	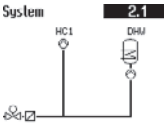	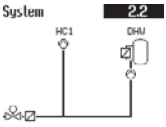	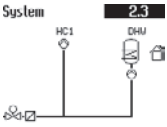	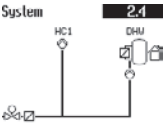
DHW type	1	2	3	4
XX =	SLP	UP2	SLP	UP2
Integration of VF4	Not possible	Possible	Not possible	Possible
ZP integration (broken line)	–	Not possible	–	Not possible
Default setting				
CO1 > F01	- 0 (without RF1)	- 0 (without RF1)	- 0 (without RF1)	- 0 (without RF1)
CO1 > F02	- 1 (with AF1)	- 1 (with AF1)	- 1 (with AF1)	- 1 (with AF1)
CO1 > F03	- 1 (with RüF1)	- 1 (with RüF1)	- 1 (with RüF1)	- 1 (with RüF1)
CO4 > F01	- 1 (with SF1)	- 1 (with SF1)	- 1 (with SF1)	- 1 (with SF1)
CO4 > F02	- 0 (without SF2)	- 1 (with SF2)	- 0 (without SF2)	- 1 (with SF2)
CO4 > F05		- 0 (without VF4)		- 0 (without VF4)
CO5 > F07	- 0 (without error message at terminal 43)	- 0 (without error message at terminal 43)	- 0 (without error message at terminal 43)	- 0 (without error message at terminal 43)

System Anl 3.0

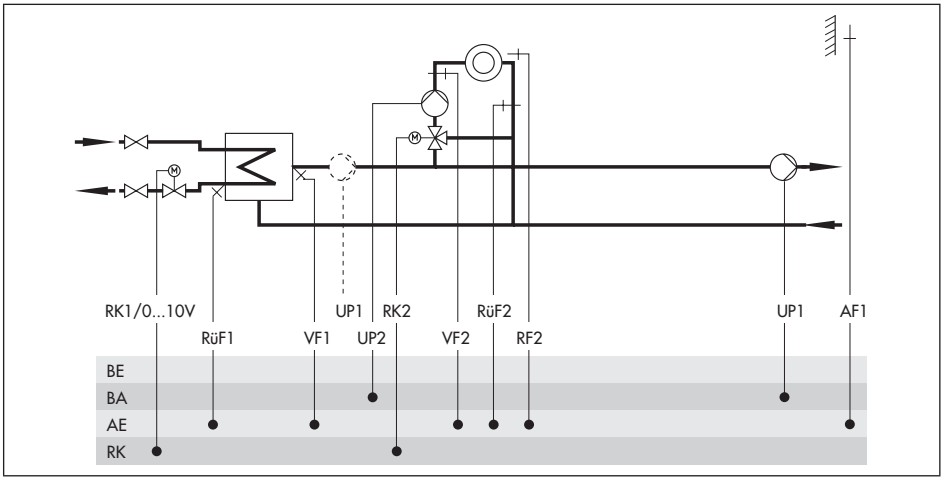

Systems	3.0
	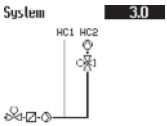
Default setting	
CO1 > F02	- 1 (with AF1)
CO1 > F03	- 1 (with RüF1)
CO2 > F01	- 0 (without RF2)
CO2 > F02	- 0 (without AF2)
CO2 > F03	- 0 (without RüF2)
CO5 > F07	- 0 (without error message at terminal 43)
CO5 > F14	- 0 (without operation UP1)

System Anl 3.1, 3.2, 3.3 and 3.4

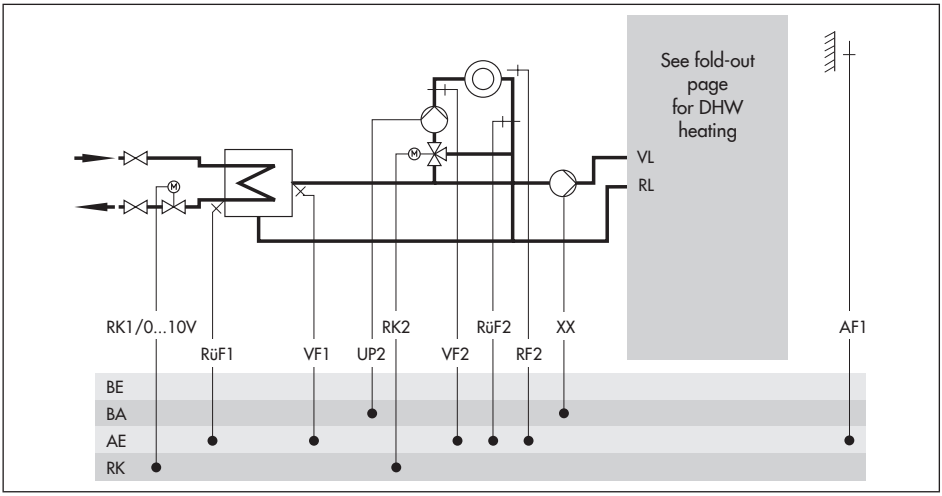

System	3.1	3.2	3.3	3.4
	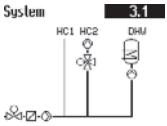	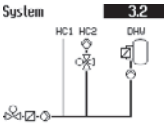	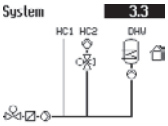	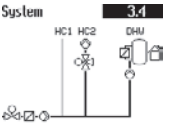
DHW type	1	2	3	4
XX =	SLP	UP1	SLP	UP1
Integration of VF4	Not possible	Possible	Not possible	Possible
ZP integration (broken line)	–	Possible	–	Possible
BA9	–	–	Replaced by UP1	Replaced by UP3
Default setting				
CO1 > F01	- 0 (without RF1)	- 0 (without RF1)	- 0 (without RF1)	- 0 (without RF1)
CO1 > F02	- 1 (with AF1)	- 1 (with AF1)	- 1 (with AF1)	- 1 (with AF1)
CO1 > F03	- 1 (with RüF1)	- 1 (with RüF1)	- 1 (with RüF1)	- 1 (with RüF1)
CO2 > F01	- 0 (without RF2)	- 0 (without RF2)	- 0 (without RF2)	- 0 (without RF2)
CO2 > F02	- 0 (without AF2)	- 0 (without AF2)	- 0 (without AF2)	- 0 (without AF2)
CO2 > F03	- 0 (without RüF2)	- 0 (without RüF2)	- 0 (without RüF2)	- 0 (without RüF2)
CO4 > F01	- 1 (with SF1)	- 1 (with SF1)	- 1 (with SF1)	- 1 (with SF1)
CO4 > F02	- 0 (without SF2)	- 1 (with SF2)	- 0 (without SF2)	- 0 (without SF2)
CO4 > F05		- 0 (without VF4)		- 0 (without VF4)
CO5 > F07	- 0 (w/o error message at terminal 46)	- 0 (w/o error message at terminal 46)	- 0 (w/o error message at terminal 46)	- 0 (w/o error message at terminal 46)

System Anl 3.5

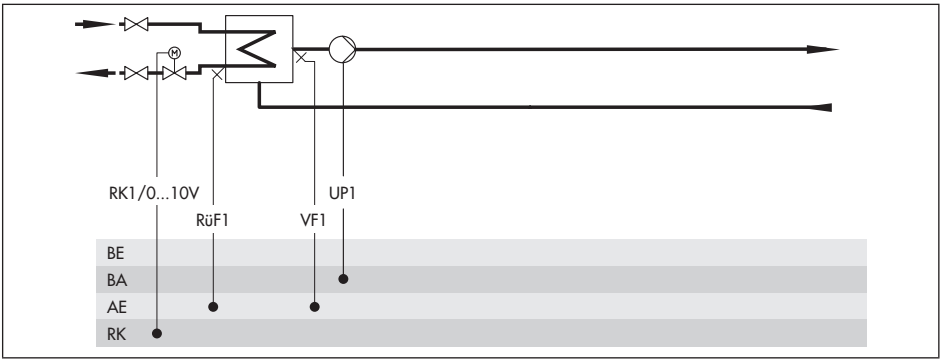

System	3.5
	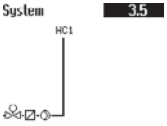
Note	Closed control circuit and UP1 are only active during the processing for an external demand
Default settings	
CO1 > F03	- 1 (with RüF1)
CO5 > F07	- 0 (without error message at terminal 43)

System Anl 4.0

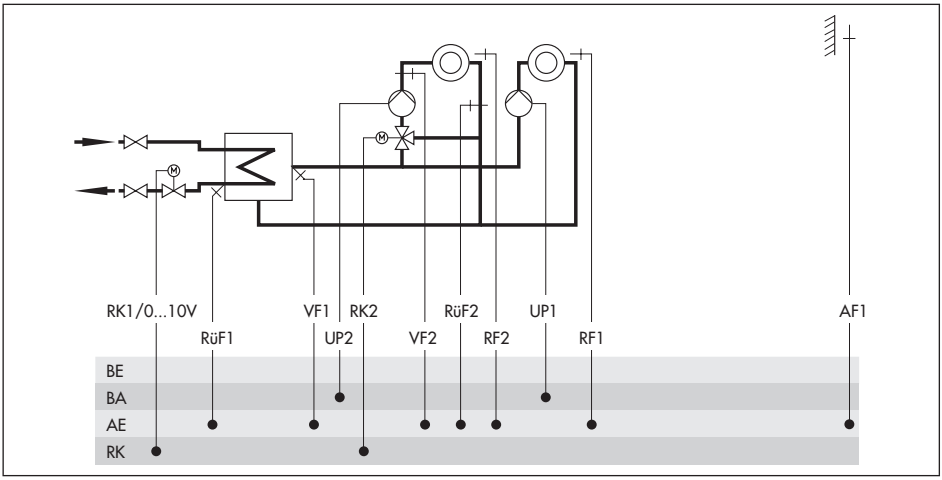

System	4.0
	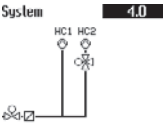
Default setting	
CO1 > F01	- 0 (without RF1)
CO1 > F02	- 1 (with AF1)
CO1 > F03	- 1 (with RüF1)
CO2 > F01	- 0 (without RF2)
CO2 > F02	- 0 (without AF2)
CO2 > F03	- 0 (without RüF2)
CO5 > F07	- 0 (without error message at terminal 37)

Systems Anl 4.1, 4.2 and 4.3

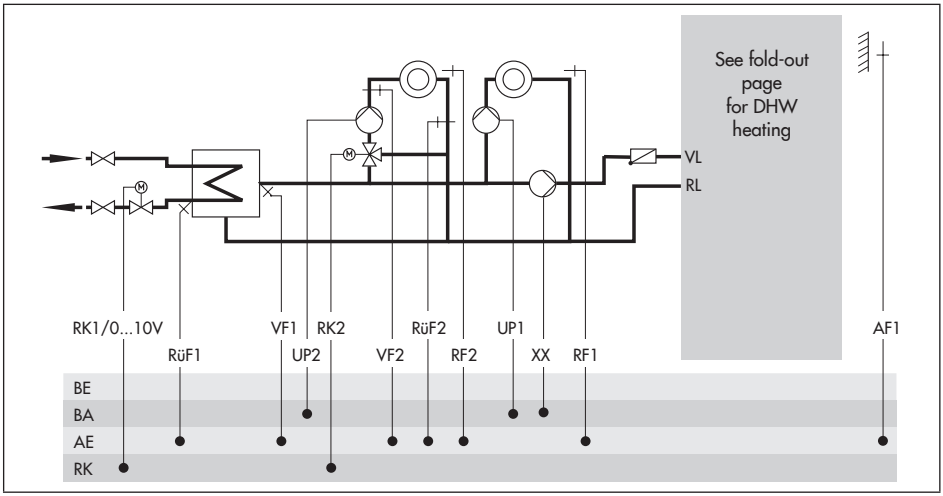

System	4.1	4.2	4.3
	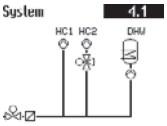	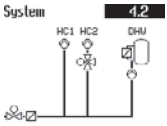	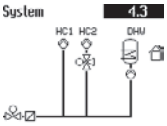
DHW type	1	2	3
XX =	SLP	UP3	SLP
Integration of VF4	Not possible	Possible	Not possible
ZP integration (broken line)	–	Not possible	–
BA9	–	–	Replaced by UP3
Default setting			
CO1 > F01	- 0 (without RF1)	- 0 (without RF1)	- 0 (without RF1)
CO1 > F02	- 1 (with AF1)	- 1 (with AF1)	- 1 (with AF1)
CO1 > F03	- 1 (with RüF1)	- 1 (with RüF1)	- 1 (with RüF1)
CO2 > F01	- 0 (without RF2)	- 0 (without RF2)	- 0 (without RF2)
CO2 > F02	- 0 (without AF2)	- 0 (without AF2)	- 0 (without AF2)
CO2 > F03	- 0 (without RüF2)	- 0 (without RüF2)	- 0 (without RüF2)
CO4 > F01	- 1 (with SF1)	- 1 (with SF1)	- 1 (with SF1)
CO4 > F02	- 0 (without SF2)	- 1 (with SF2)	- 0 (without SF2)
CO4 > F05		- 0 (without VF4)	
CO5 > F07	- 0 (without error message at terminal 46)	- 0 (without error message at terminal 46)	- 0 (without error message at terminal 46)

System Anl 4.5

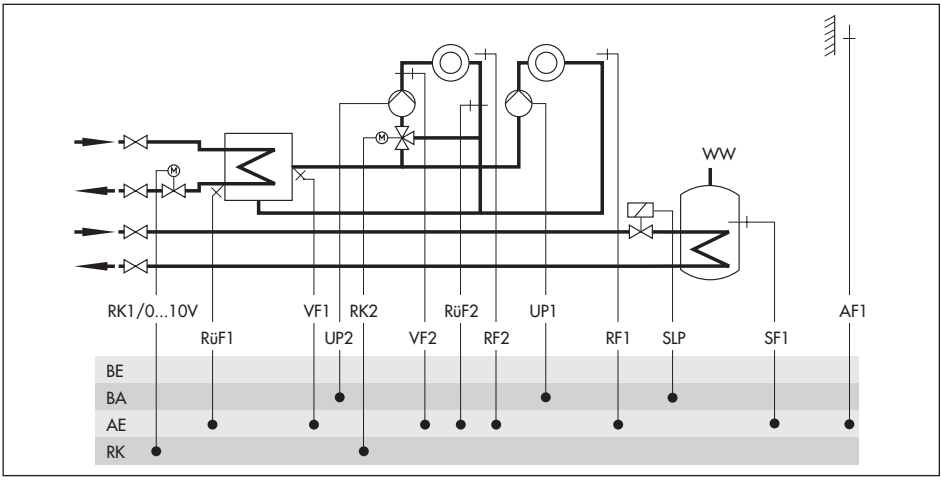

System	4.5
	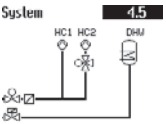
Default setting	
CO1 > F01	- 0 (without RF1)
CO1 > F02	- 1 (with AF1)
CO1 > F03	- 1 (with RüF1)
CO2 > F01	- 0 (without RF2)
CO2 > F02	- 0 (without AF2)
CO2 > F03	- 0 (without RüF2)
CO4 > F01	- 1 (with SF1)
CO4 > F02	- 0 (without SF2)
CO5 > F07	- 0 (without error message at terminal 46)

System Anl 5.0

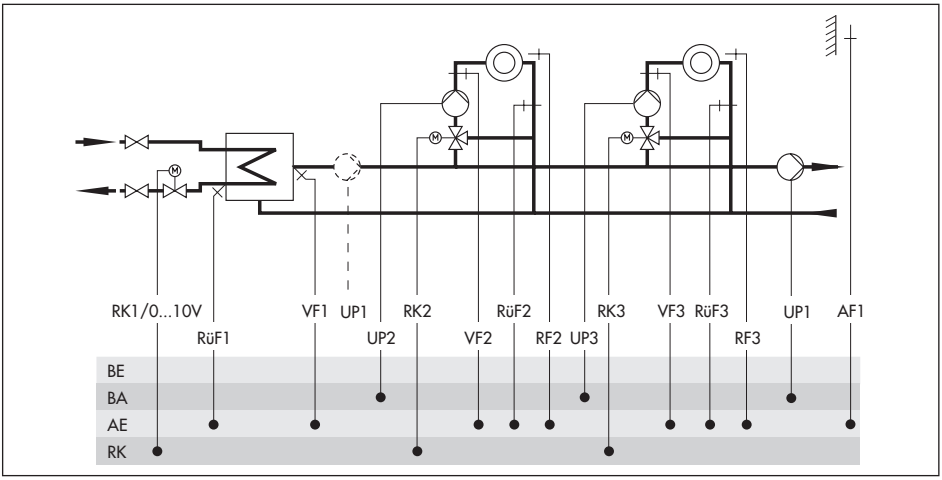

System	5.0
	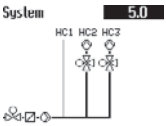

With CO1 > F02 - 1 and CO2 > F02 - 1 and CO3 > F02 - 0, AF1 is assigned to heating circuit RK3 and AF2 to heating circuit RK2.
With CO1 > F02 - 1 and CO2 > F02 - 0 and CO3 > F02 - 1, AF1 is assigned to heating circuit RK1 and AF2 to heating circuit RK3.

Default setting	
CO1 > F01	- 0 (without RF1)
CO1 > F02	- 1 (with AF1)
CO1 > F03	- 1 (with RüF1)
CO2 > F01	- 0 (without RF2)
CO2 > F02	- 0 (without AF2 in RK2)
CO2 > F03	- 0 (without RüF2)
CO3 > F01	- 0 (without RF3)
CO3 > F02	- 0 (without AF2 in RK3)
CO3 > F03	- 0 (without RüF3)
CO5 > F07	- 0 (without error message at terminal 37)
CO5 > F14	- 0 (without operation UP1)

Systems Anl 5.1 and 5.2

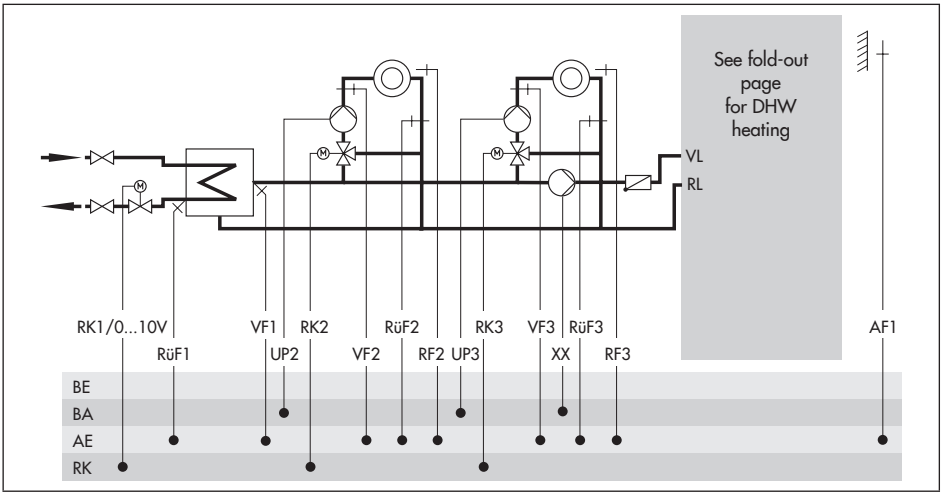

System	5.1	5.2
	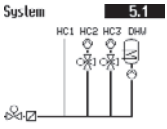	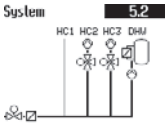
With CO1 > F02 - 1 and CO2 > F02 - 1 and CO3 > F02 - 0, AF1 is assigned to heating circuit RK3 and AF2 to heating circuit RK2. With CO1 > F02 - 1 and CO2 > F02 - 0 and CO3 > F02 - 1, AF1 is assigned to heating circuit RK1 and AF2 to heating circuit RK3.		
DHW type	1	2
XX =	SLP	UP1
Integration of VF4	Not possible	Possible
ZP integration (broken line)	–	Possible
Default setting		
CO1 > F01	- 0 (without RF1)	- 0 (without RF1)
CO1 > F02	- 1 (with AF1)	- 1 (with AF1)
CO1 > F03	- 1 (with RüF1)	- 1 (with RüF1)
CO2 > F01	- 0 (without RF2)	- 0 (without RF2)
CO2 > F02	- 0 (without AF2 in RK2)	- 0 (without AF2 in RK2)
CO2 > F03	- 0 (without RüF2)	- 0 (without RüF2)
CO3 > F01	- 0 (without RF2)	- 0 (without RF3)
CO3 > F02	- 0 (without AF2 in RK3)	- 0 (without AF2 in RK3)
CO3 > F03	- 0 (without RüF2)	- 0 (without RüF3)
CO4 > F01	- 1 (with SF1)	- 1 (with SF1)
CO4 > F02	- 0 (without SF2)	- 1 (with SF2)
CO4 > F05		- 0 (without VF4)

System Anl 6.0

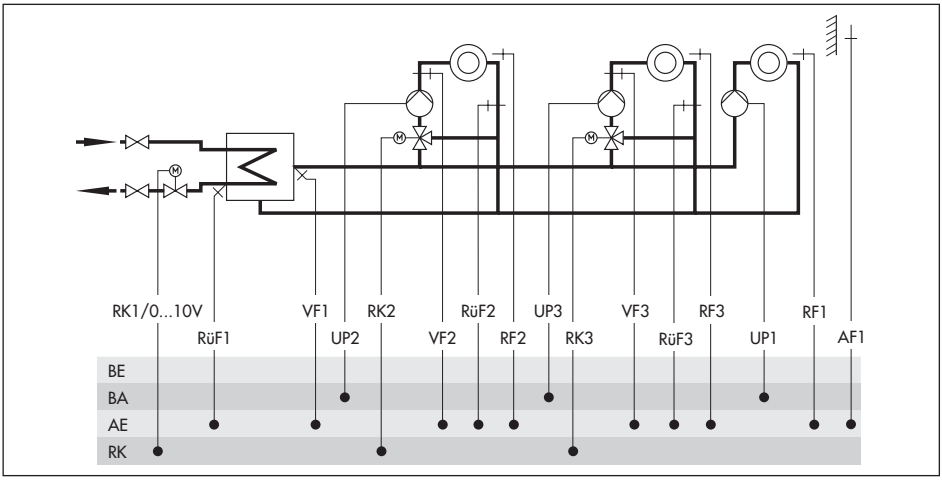

System	6.0
	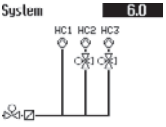

With CO1 > F02 - 1 and CO2 > F02 - 1 and CO3 > F02 - 0, AF1 is assigned to heating circuits RK1 and RK3 and AF2 to heating circuit RK2.
With CO1 > F02 - 1 and CO2 > F02 - 0 and CO3 > F02 - 1, AF1 is assigned to heating circuits RK1 and RK2 and AF2 to heating circuit RK3.

Default setting	
CO1 > F01	- 0 (without RF1)
CO1 > F02	- 1 (with AF1)
CO1 > F03	- 1 (with RüF1)
CO2 > F01	- 0 (without RF2)
CO2 > F02	- 0 (without AF2)
CO2 > F03	- 0 (without RüF2)
CO3 > F01	- 0 (without RF3)
CO3 > F02	- 0 (without AF2 in RK3)
CO3 > F03	- 0 (without RüF3)
CO5 > F07	- 0 (without error message at terminal 37)

Systems Anl 7.1 and 7.2

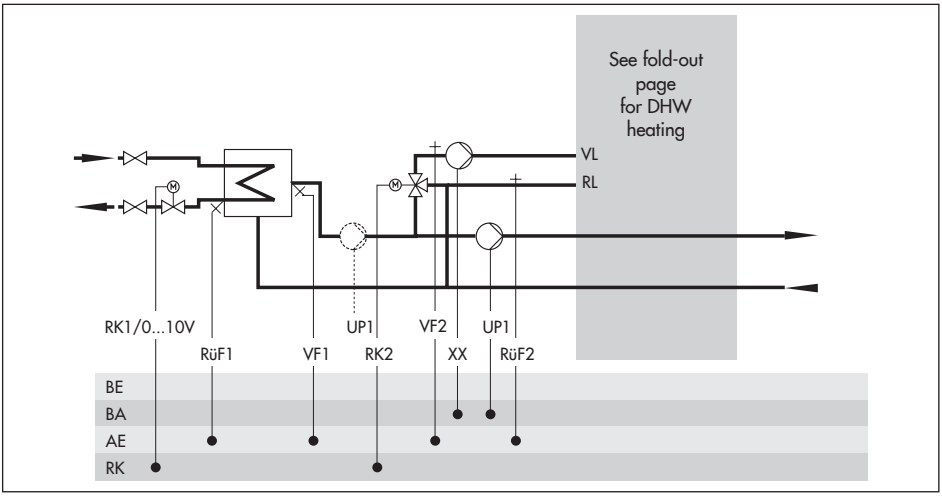

System	7.1	7.2
	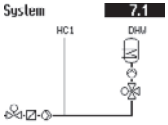	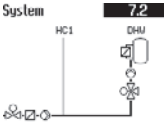
DHW type	1	2
XX =	SLP	UP2
Integration of VF4	Not possible	Possible
ZP integration (broken line)	–	Possible
Default setting		
CO1 > F01	- 0 (without RF1)	- 0 (without RF1)
CO1 > F02	- 0 (without AF1)	- 0 (without AF1)
CO1 > F03	- 1 (with RüF1)	- 1 (with RüF1)
CO4 > F01	- 1 (with SF1)	- 1 (with SF1)
CO4 > F02	- 0 (without SF2)	- 1 (with SF2)
CO4 > F03	- 0 (without RüF2)	- 0 (without RüF2)
CO4 > F05		- 0 (without VF4)
CO5 > F07	- 0 (without error message at terminal 46)	- 0 (without error message at terminal 46)
CO5 > F14	- 0 (without operation UP1)	- 0 (without operation UP1)

Systems Anl 8.1 and 8.2

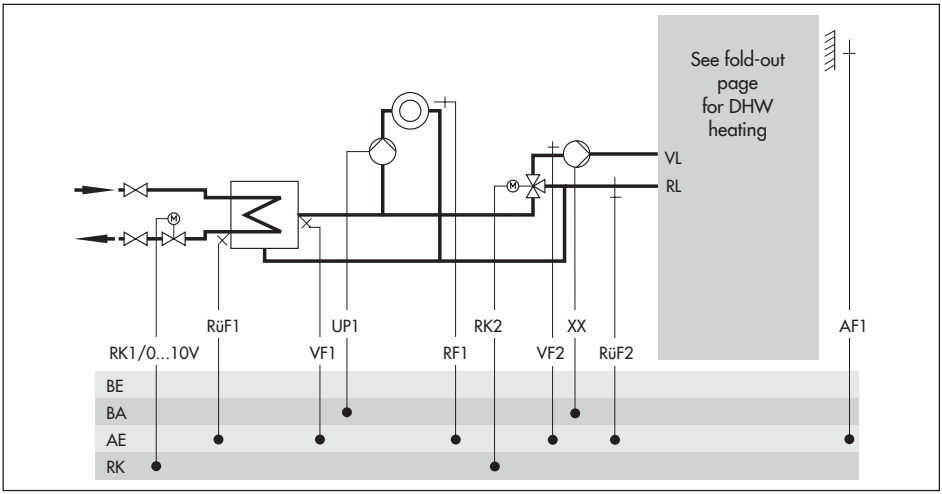

System	8.1	8.2
	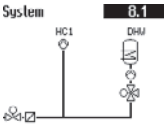	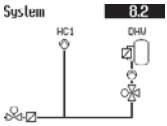
DHW type	1	2
XX =	SLP	UP2
Integration of VF4	Not possible	Possible
ZP integration (broken line)	–	Not possible
Default setting		
CO1 > F01	- 0 (without RF1)	- 0 (without RF1)
CO1 > F02	- 1 (with AF1)	- 1 (with AF1)
CO1 > F03	- 1 (with RüF1)	- 1 (with RüF1)
CO4 > F01	- 1 (with SF1)	- 1 (with SF1)
CO4 > F02	- 0 (without SF2)	- 1 (with SF2)
CO4 > F03	- 0 (without RüF2)	- 0 (without RüF2)
CO4 > F05		- 0 (without VF4)
CO5 > F07	- 0 (without error message at terminal 46)	- 0 (without error message at terminal 46)

Systems Anl 9.1 and 9.2

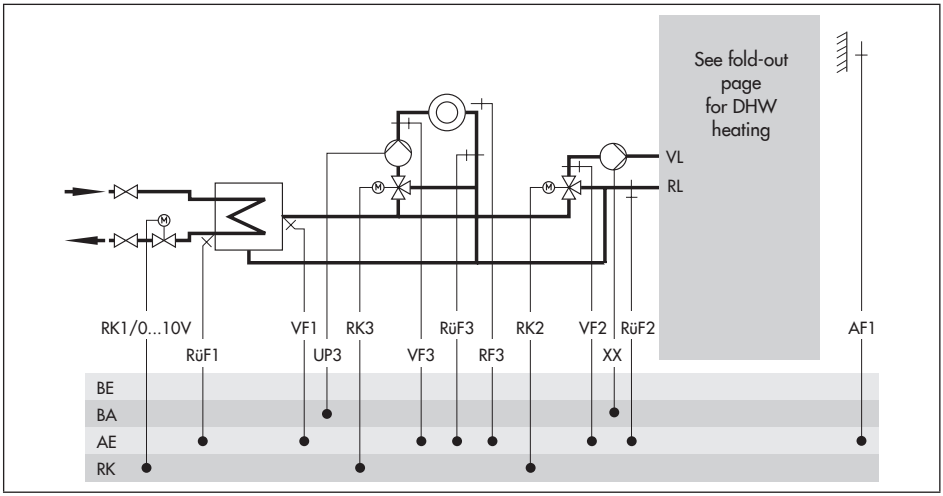

System	9.1	9.2
	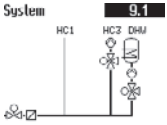	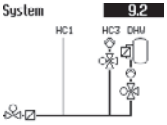
DHW type	1	2
XX =	SLP	UP2
Integration of VF4	Not possible	Possible
ZP integration (broken line)	–	Possible
Default setting		
CO1 > F01	- 0 (without RF1)	- 0 (without RF1)
CO1 > F02	- 1 (with AF1)	- 1 (with AF1)
CO1 > F03	- 1 (with RüF1)	- 1 (with RüF1)
CO3 > F01	- 0 (without RF3)	- 0 (without RF3)
CO3 > F02	- 0 (without AF2 in RK3)	- 0 (without AF2 in RK3)
CO3 > F03	- 0 (without RüF3)	- 0 (without RüF3)
CO4 > F01	- 1 (with SF1)	- 1 (with SF1)
CO4 > F02	- 0 (without SF2)	- 1 (with SF2)
CO4 > F03	- 0 (without RüF2)	- 0 (without RüF2)
CO4 > F05		- 0 (without VF4)

Systems Anl 9.5 and 9.6

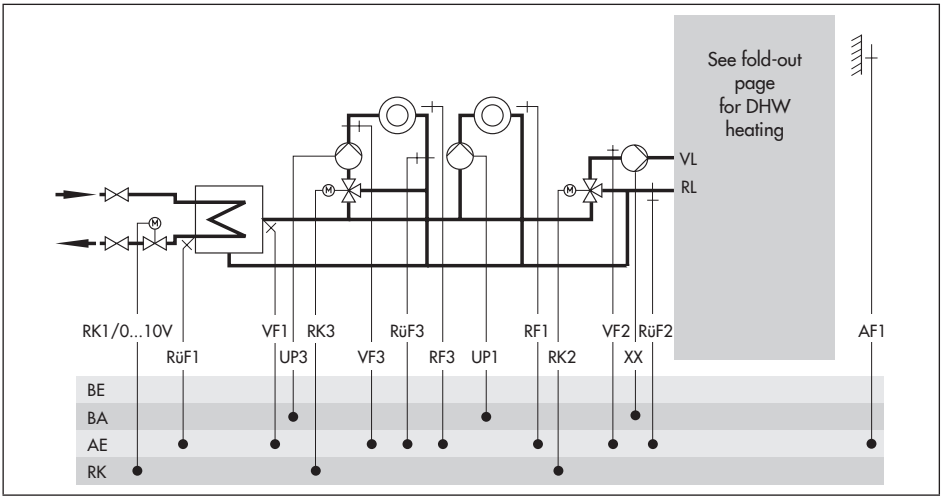

System	9.5	9.6
	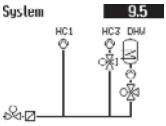	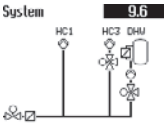
DHW type	1	2
XX =	SLP	UP2
Integration of VF4	Not possible	Possible
ZP integration (broken line)	–	Not possible
Default setting		
CO1 > F01	- 0 (without RF1)	- 0 (without RF1)
CO1 > F02	- 1 (with AF1)	- 1 (with AF1)
CO1 > F03	- 1 (with RüF1)	- 1 (with RüF1)
CO3 > F01	- 0 (without RF3)	- 0 (without RF3)
CO3 > F02	- 0 (without AF2 in RK3)	- 0 (without AF2 in RK3)
CO3 > F03	- 0 (without RüF3)	- 0 (without RüF3)
CO4 > F01	- 1 (with SF1)	- 1 (with SF1)
CO4 > F02	- 0 (without SF2)	- 1 (with SF2)
CO4 > F03	- 0 (without RüF2)	- 0 (without RüF2)
CO4 > F05		- 0 (without VF4)

System Anl 10.0-1

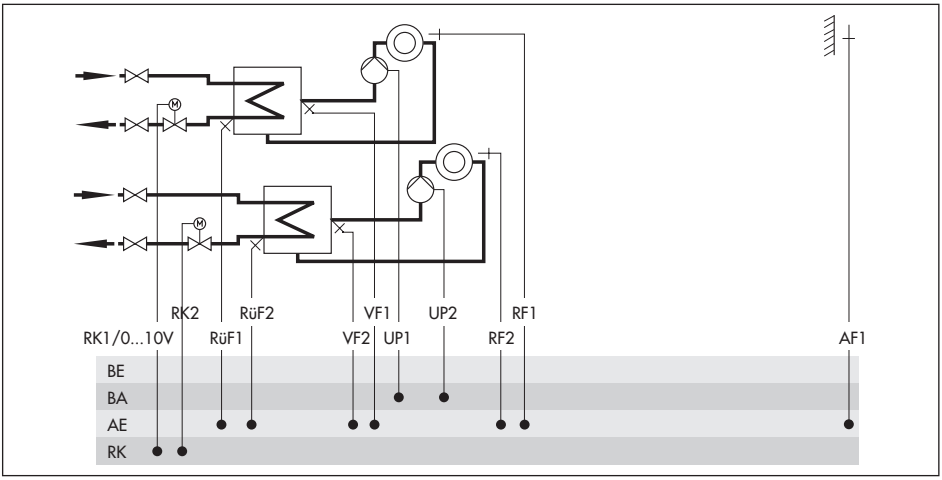

System	10.0-1
	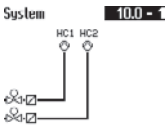
Default setting	
CO1 > F01	- 0 (without RF1)
CO1 > F02	- 1 (with AF1)
CO1 > F03	- 1 (with RüF1)
CO2 > F01	- 0 (without RF2)
CO2 > F02	- 0 (without AF2)
CO2 > F03	- 1 (with RüF2)
CO5 > F07	- 0 (without error message at terminal 37)

System Anl 10.0-2

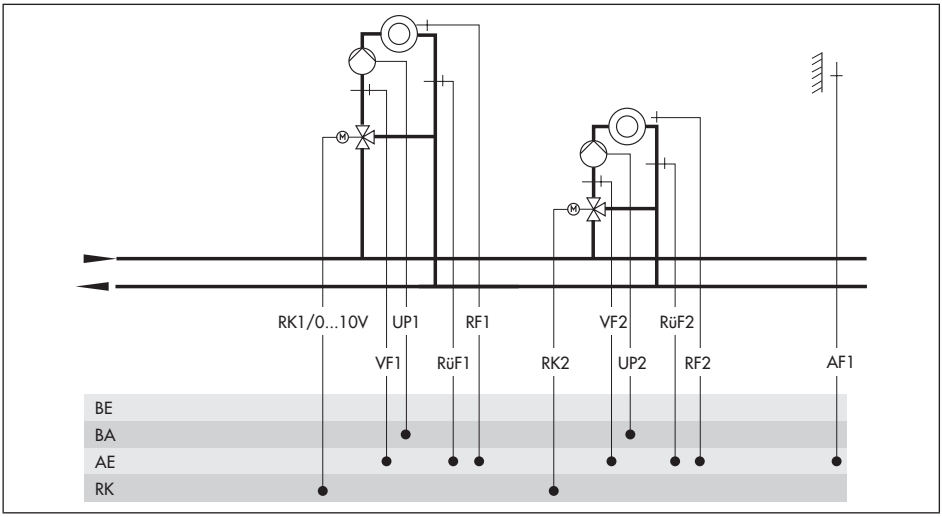

Systems	10.0-2
	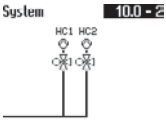
Default setting	
CO1 > F01	- 0 (without RF1)
CO1 > F02	- 1 (with AF1)
CO1 > F03	- 1 (with RüF1)
CO2 > F01	- 0 (without RF2)
CO2 > F02	- 0 (without AF2)
CO2 > F03	- 1 (with RüF2)
CO5 > F07	- 0 (without error message at terminal 37)

Systems Anl 10.1-1 and 10.3-1

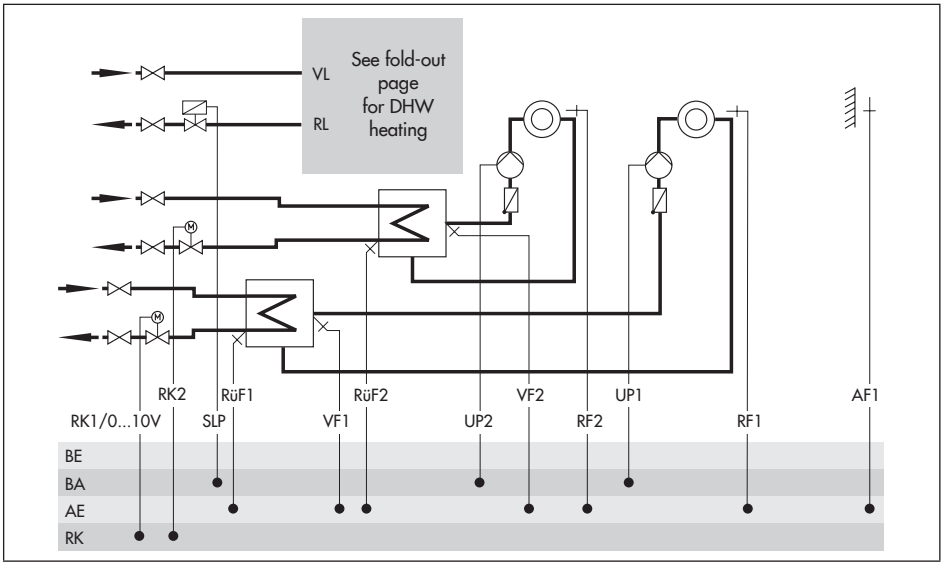

System	10.1-1	10.3-1
	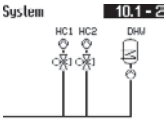	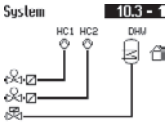
DHW type	1	3
XX =	SLP	SLP
Integration of VF4	Possible	Possible
BA9		Replaced by UP3
Default setting		
CO1 > F01	- 0 (without RF1)	- 0 (without RF1)
CO1 > F02	- 1 (with AF1)	- 1 (with AF1)
CO1 > F03	- 0 (without RüF1)	- 0 (without RüF1)
CO2 > F01	- 0 (without RF2)	- 0 (without RF2)
CO2 > F02	- 0 (without AF2)	- 0 (without AF2)
CO2 > F03	- 0 (without RüF2)	- 0 (without RüF2)
CO4 > F01	- 1 (with SF1)	- 1 (with SF1)
CO4 > F02	- 0 (without SF2)	- 0 (without SF2)
CO4 > F05	- 0 (without VF4)	- 0 (without VF4)
CO5 > F07	- 0 (without error message at terminal 46)	- 0 (without error message at terminal 46)

Systems Anl 10.1-2, 10.2 and 10.3-2

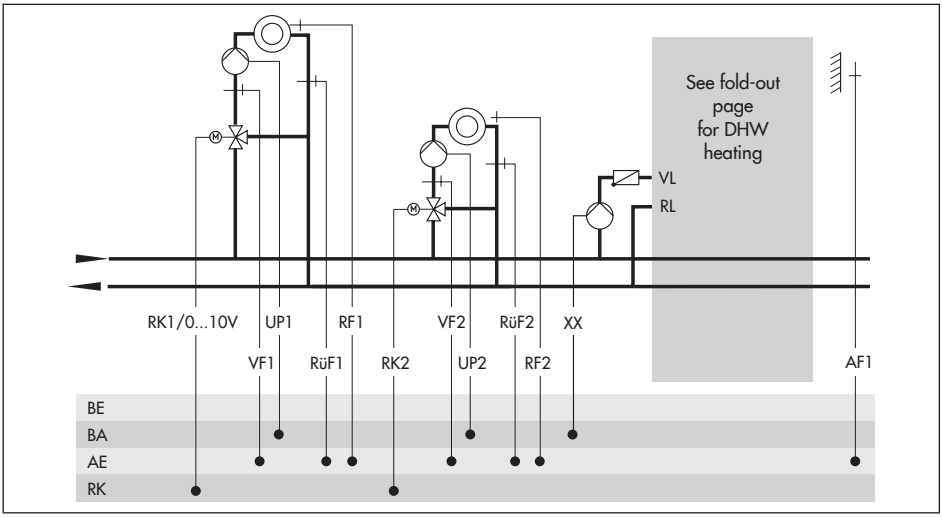

System	10.1-2	10.2	10.3-2
	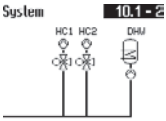	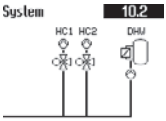	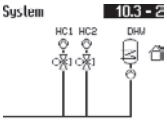
DHW type	1	2	3
XX =	SLP	UP3	SLP
Integration of VF4	Possible	Possible	Possible
ZP integration (broken line)	–	Not possible	–
BA9	–	–	Replaced by UP3
Default setting			
CO1 > F01	- 0 (without RF1)	- 0 (without RF1)	- 0 (without RF1)
CO1 > F02	- 1 (with AF1)	- 1 (with AF1)	- 1 (with AF1)
CO1 > F03	- 0 (without RüF1)	- 0 (without RüF1)	- 0 (without RüF1)
CO2 > F01	- 0 (without RF2)	- 0 (without RF2)	- 0 (without RF2)
CO2 > F02	- 0 (without AF2)	- 0 (without AF2)	- 0 (without AF2)
CO2 > F03	- 0 (without RüF2)	- 0 (without RüF2)	- 0 (without RüF2)
CO4 > F01	- 1 (with SF1)	- 1 (with SF1)	- 1 (with SF1)

CO4 > F02	- 0 (without SF2)	- 1 (with SF2)	- 0 (without SF2)
CO4 > F05	- 0 (without VF4)	- 0 (without VF4)	- 0 (without VF4)
CO5 > F07	- 0 (without error message at terminal 46)	- 0 (without error message at terminal 46)	- 0 (without error message at terminal 46)

System Anl 10.5

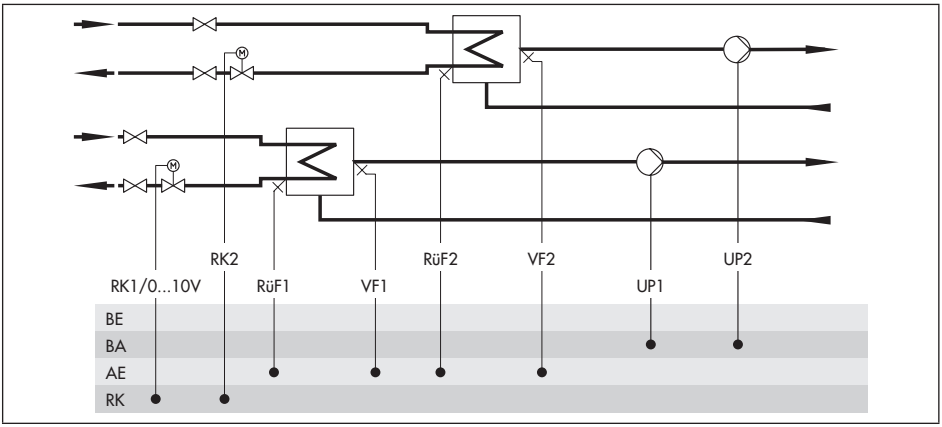

Systems	10.5
	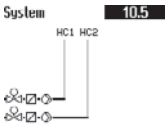
Default setting	
CO1 > F02	- 0 (without AF1)
CO1 > F03	- 1 (with RüF1)
CO2 > F02	- 0 (without AF2)
CO2 > F03	- 1 (with RüF2)
CO5 > F07	- 0 (without error message at terminal 37)

Systems Anl 11.0, 11.1-2, 11.3 and 11.4

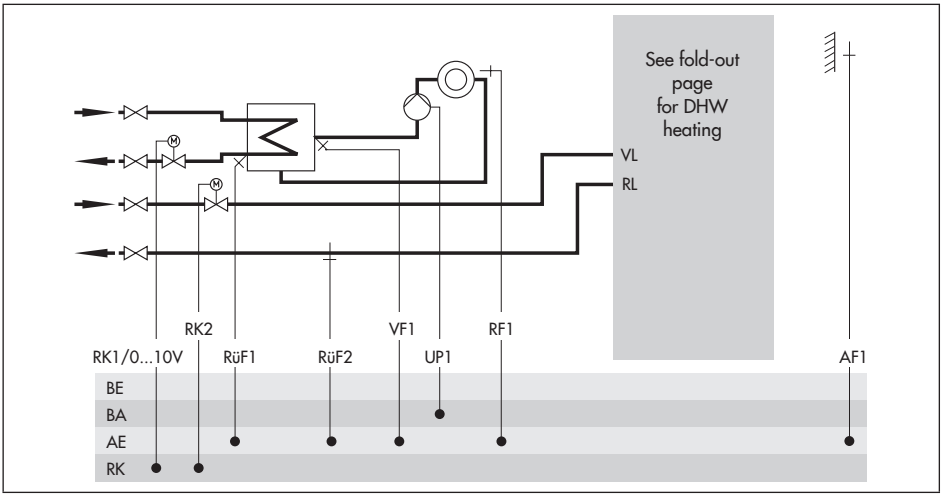

System	11.0	11.2-1	11.3	11.4
	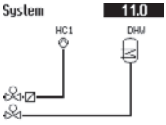	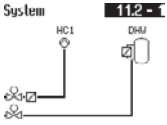	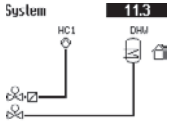	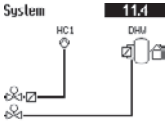
DHW type	1	2	3	4
Integration of VF4	Not possible	Without, VF2 takes on the position of VF4	Not possible	Without, VF2 takes on the position of VF4
ZP integration (broken line)	–	Possible	–	Possible
BA9	–	–	Replaced by UP2	Replaced by UP2
Default setting				
CO1 > F01	- 0 (without RF1)	- 0 (without RF1)	- 0 (without RF1)	- 0 (without RF1)
CO1 > F02	- 1 (with AF1)	- 1 (with AF1)	- 1 (with AF1)	- 1 (with AF1)
CO1 > F03	- 1 (with RüF1)	- 1 (with RüF1)	- 1 (with RüF1)	- 1 (with RüF1)
CO4 > F01		- 1 (with SF1)		- 1 (with SF1)
CO4 > F02		- 1 (with SF2)		- 0 (without SF2)
CO4 > F03	- 0 (without RüF2)	- 0 (without RüF2)	- 0 (without RüF2)	- 0 (without RüF2)
CO5 > F07	- 0 (without error message at terminal 46)	- 0 (without error message at terminal 46)	- 0 (without error message at terminal 46)	- 0 (without error message at terminal 46)

System Anl 11.1-1

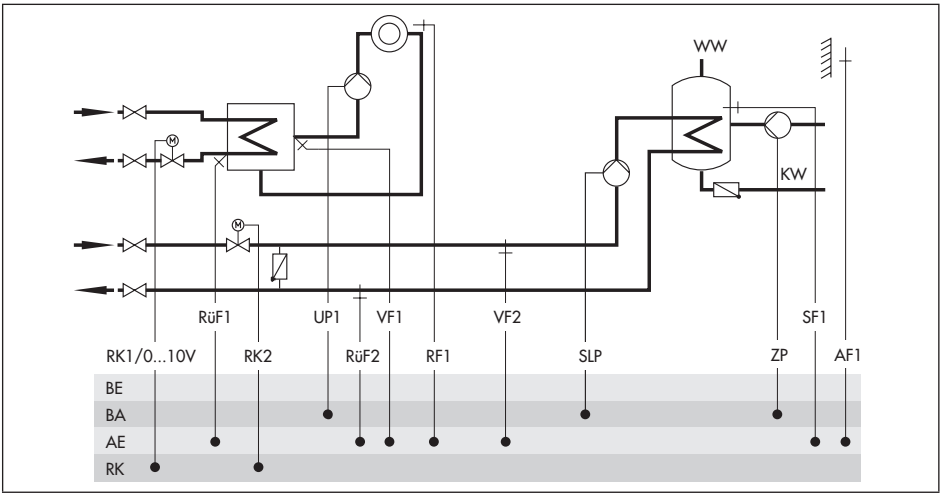

System	11.1-1
	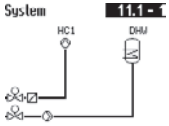
Default setting	
CO1 > F01	- 0 (without RF1)
CO1 > F02	- 1 (with AF1)
CO1 > F03	- 1 (with RüF1)
CO4 > F01	- 1 (with SF1)
CO4 > F02	- 0 (without SF2)
CO4 > F03	- 0 (without RüF2)
CO5 > F07	- 0 (without error message at terminal 46)

System Anl 11.1-2

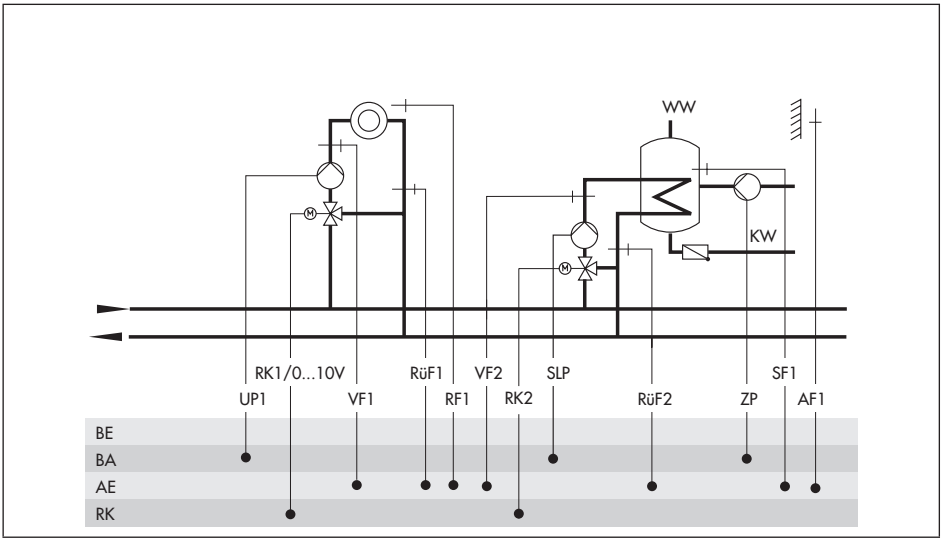

System	11.1-2
	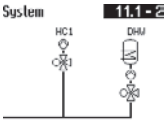
Default setting	
CO1 > F01	- 0 (without RF1)
CO1 > F02	- 1 (with AF1)
CO1 > F03	- 1 (with RüF1)
CO4 > F01	- 1 (with SF1)
CO4 > F02	- 0 (without SF2)
CO4 > F03	- 0 (without RüF2)
CO5 > F07	- 0 (without error message at terminal 46)

System Anl 11.1-3

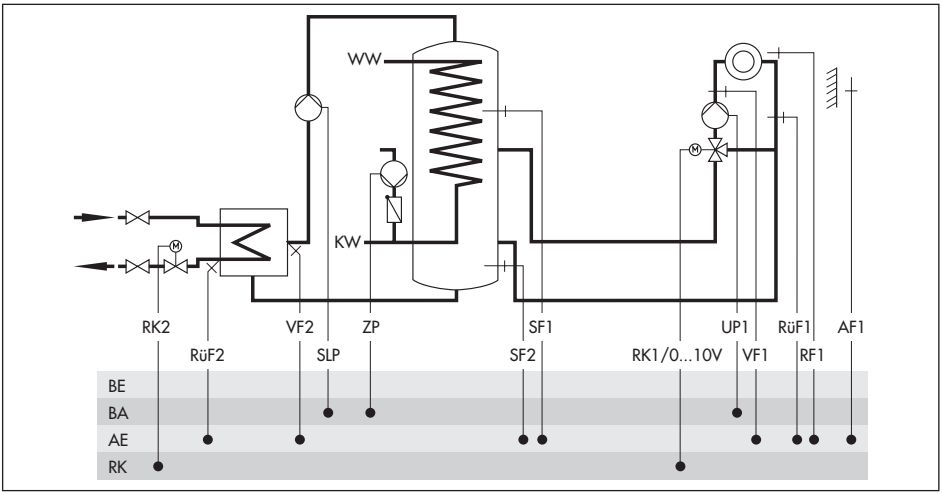

System	11.1-3
	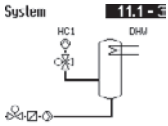
Default setting	
CO1 > F01	- 0 (without RF1)
CO1 > F02	- 1 (with AF1)
CO1 > F03	- 1 (with RüF1)
CO4 > F01	- 1 (with SF1)
CO4 > F02	- 0 (without SF2)
CO4 > F03	- 0 (without RüF2)
CO5 > F07	- 0 (without error message at terminal 46)

System Anl 11.2-2

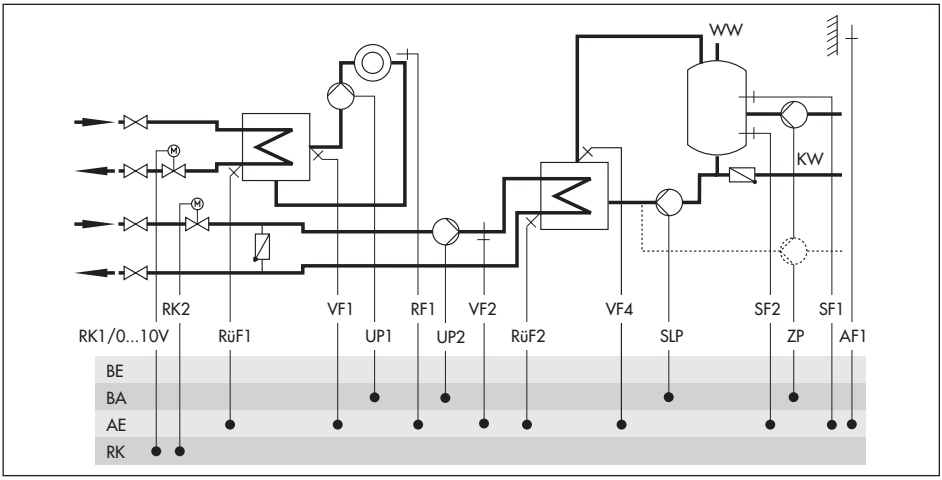

Systems	11.2-2
	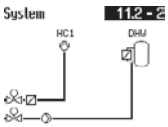
Default setting	
CO1 > F01	- 0 (without RF1)
CO1 > F02	- 1 (with AF1)
CO1 > F03	- 1 (with RüF1)
CO4 > F01	- 1 (with SF1)
CO4 > F02	- 1 (with SF2)
CO4 > F03	- 0 (without RüF2)
CO4 > F05	- 0 (without VF4)
CO5 > F07	- 0 (without error message at terminal 46)

System Anl 11.2-3

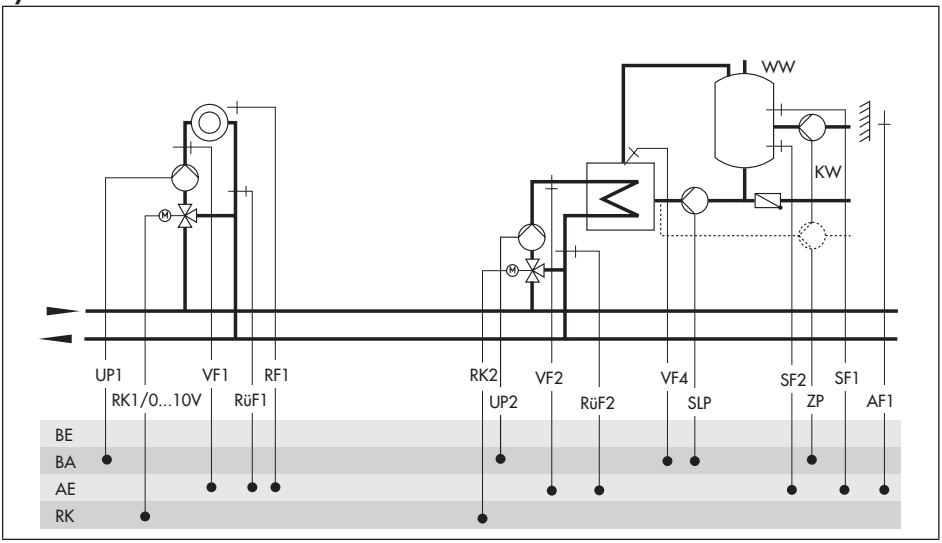

System	11.2-3
	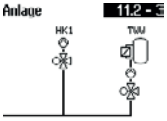
	VF2 takes on the position of VF4 (provided VF4 is not assigned)
Default setting	
CO1 > F01	- 0 (without RF1)
CO1 > F02	- 1 (with AF1)
CO1 > F03	- 1 (with RüF1)
CO4 > F01	- 1 (with SF1)
CO4 > F02	- 1 (with SF2)
CO4 > F03	- 0 (without RüF2)
CO4 > F05	- 0 (without VF4)
CO5 > F07	- 0 (without error message at terminal 46)

System Anl 11.5

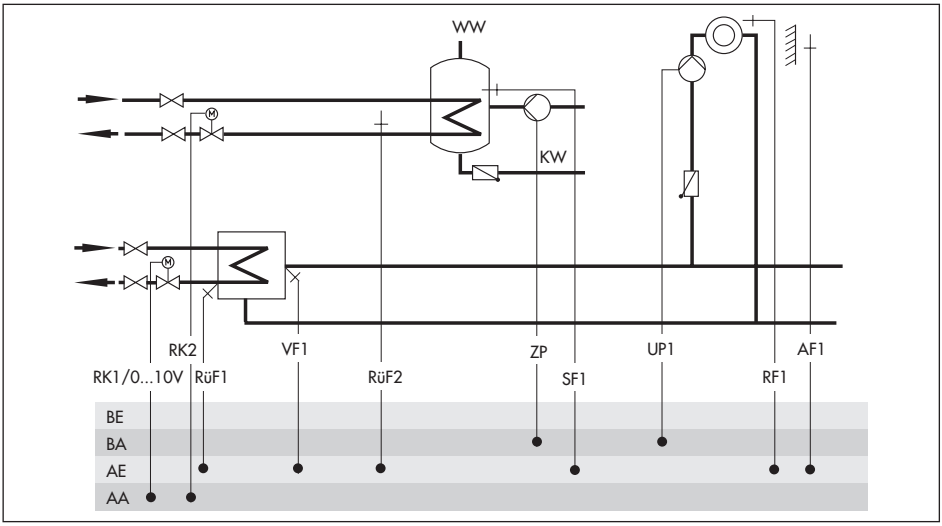

System	11.5
	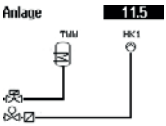
Note	DHW circuit with adjustable valve position for storage tank charging in absolute priority operation. By using RüF2, the ready-adjusted valve position is governed by the return flow temperature limitation.
Default setting	
CO1 > F01	- 0 (without RF1)
CO1 > F02	- 1 (with AF1)
CO4 > F02	- 0 (without SF2)
CO4 > F03	- 1 (with RüF2)

Systems Anl 11.6-1 and 11.6-2

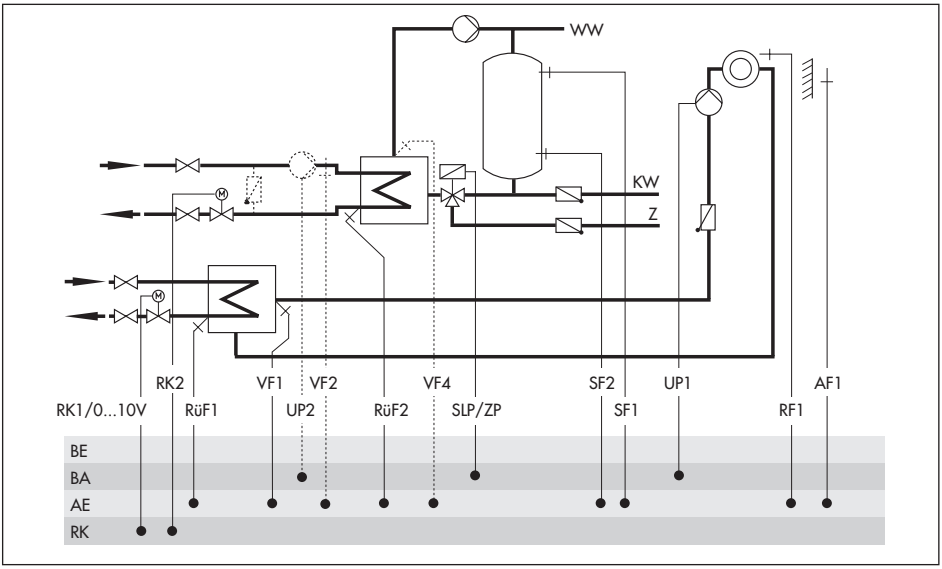

System	11.6-1	11.6-2
	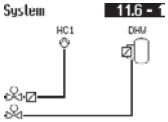	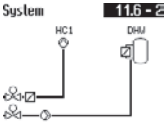
Install a continuously running pump in the DHW circuit and connect it directly to the main power supply.		
Integration of VF4 and UP2	Without, VF2 takes on the position of VF4	With, VF2 takes on the position of VF4 (provided VF4 is not assigned)
Default setting		
CO1 > F01	- 0 (without RF1)	- 0 (without RF1)
CO1 > F02	- 1 (with AF1)	- 1 (with AF1)
CO1 > F03	- 1 (with RüF1)	- 1 (with RüF1)
CO4 > F01	- 1 (with SF1)	- 1 (with SF1)
CO4 > F02	- 1 (with SF2)	- 1 (with SF2)
CO4 > F03	- 0 (without RüF2)	- 0 (without RüF2)
CO4 > F05		- 0 (without VF4)
CO5 > F07	- 0 (without error message at terminal 46)	- 0 (without error message at terminal 46)

Systems Anl 11.9-1 and 11.9-2

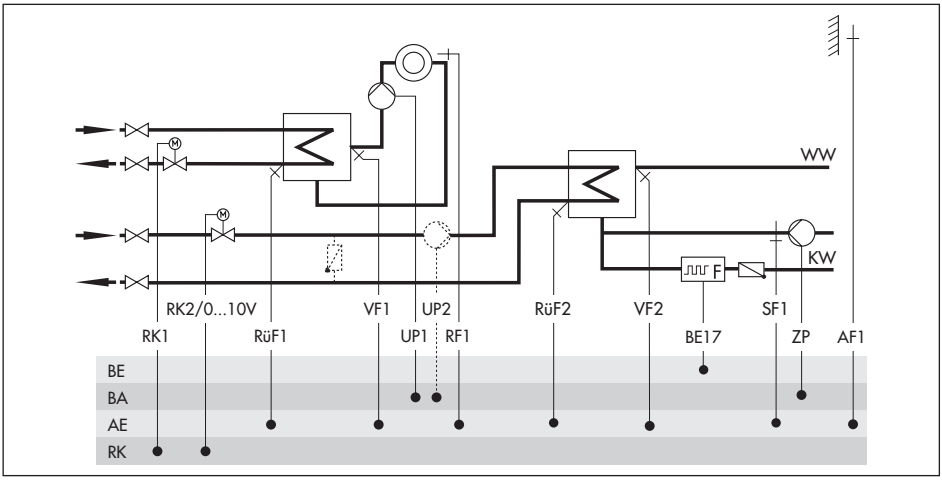

System	11.9-1	11.9-2
	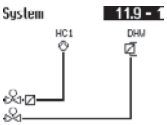	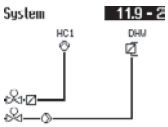
Integration of UP2	Without	With
Default setting		
CO1 > F01	- 0 (without RF1)	- 0 (without RF1)
CO1 > F02	- 1 (with AF1)	- 1 (with AF1)
CO1 > F03	- 1 (with RüF1)	- 1 (with RüF1)
CO4 > F01	- 0 (without SF1)	- 0 (without SF1)
CO4 > F03	- 0 (without RüF2)	- 0 (without RüF2)
CO4 > F04	- 0 (without flow rate sensor)	- 0 (without flow rate sensor)
CO5 > F07	- 0 (without error message at terminal 37)	- 0 (without error message at terminal 37)

Systems Anl 12.0 and 12.1

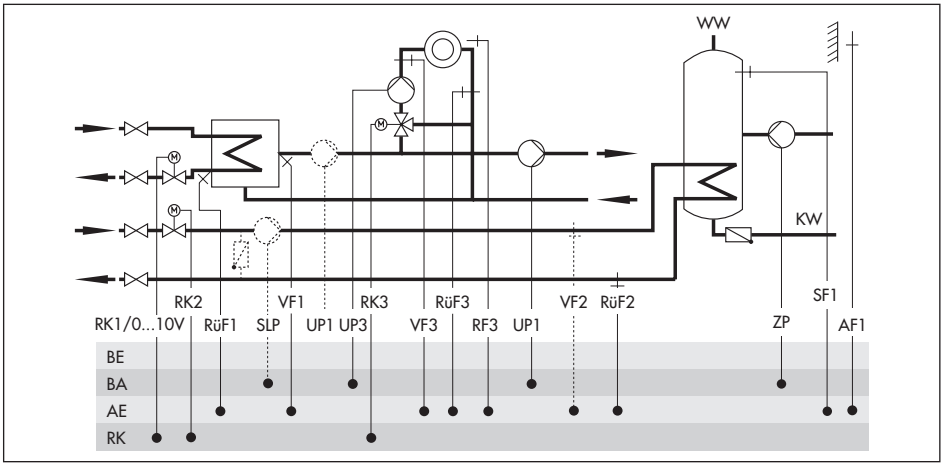

System	12.0	12.1
	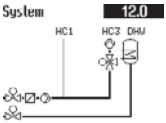	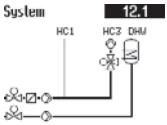
Integration of VF2 and SLP	Without	With
Default setting		
CO1 > F02	- 1 (with AF1)	- 1 (with AF1)
CO1 > F03	- 1 (with RüF1)	- 1 (with RüF1)
CO3 > F01	- 0 (without RF3)	- 0 (without RF3)
CO3 > F02	- 0 (without AF2 in RK3)	- 0 (without AF2 in RK3)
CO3 > F03	- 0 (without RüF3)	- 0 (without RüF3)
CO4 > F01		- 1 (with SF1)
CO4 > F02		- 0 (without SF2)
CO4 > F03	- 0 (without RüF2)	- 0 (without RüF2)
CO5 > F07	- 0 (without error message at terminal 37)	
CO5 > F14	- 0 (without operation UP1)	- 0 (without operation UP1)

Systems Anl 12.2-1 and 12.2-2

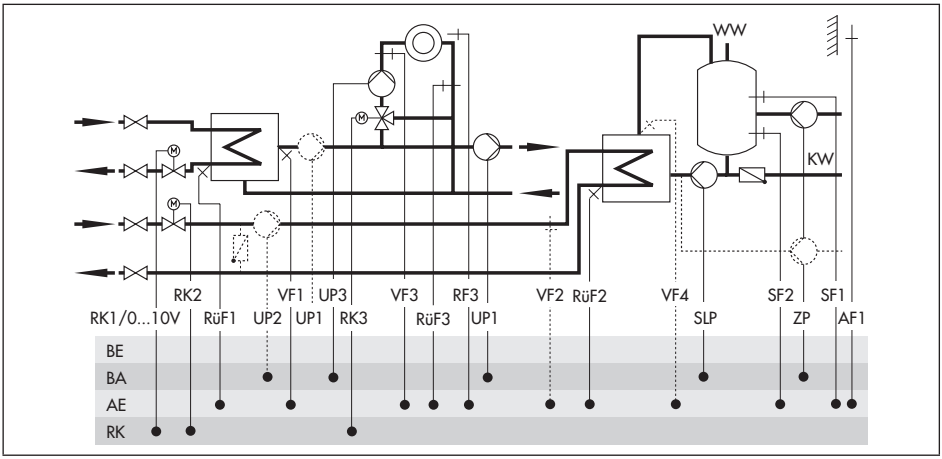

System	12.2-1	12.2-2
	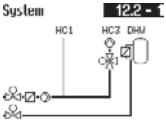	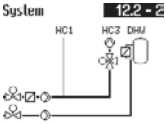
Integration of VF4 and UP2	Without, VF2 takes on the position of VF4	With, VF2 takes on the position of VF4 (provided VF4 is not assigned)
ZP integration (broken line)	Possible	Possible
Default setting		
CO1 > F02	- 1 (with AF1)	- 1 (with AF1)
CO1 > F03	- 1 (with RüF1)	- 1 (with RüF1)
CO3 > F01	- 0 (without RF3)	- 0 (without RF3)
CO3 > F02	- 0 (without AF2 in RK3)	- 0 (without AF2 in RK3)
CO3 > F03	- 0 (without RüF3)	- 0 (without RüF3)
CO4 > F01	- 1 (with SF1)	- 1 (with SF1)
CO4 > F02	- 1 (with SF2)	- 1 (with SF2)
CO4 > F03	- 0 (without RüF2)	- 0 (without RüF2)
CO4 > F05		- 0 (without VF4)
CO5 > F14	- 0 (without operation UP1)	- 0 (without operation UP1)

Systems Anl 12.9-1 and 12.9-2

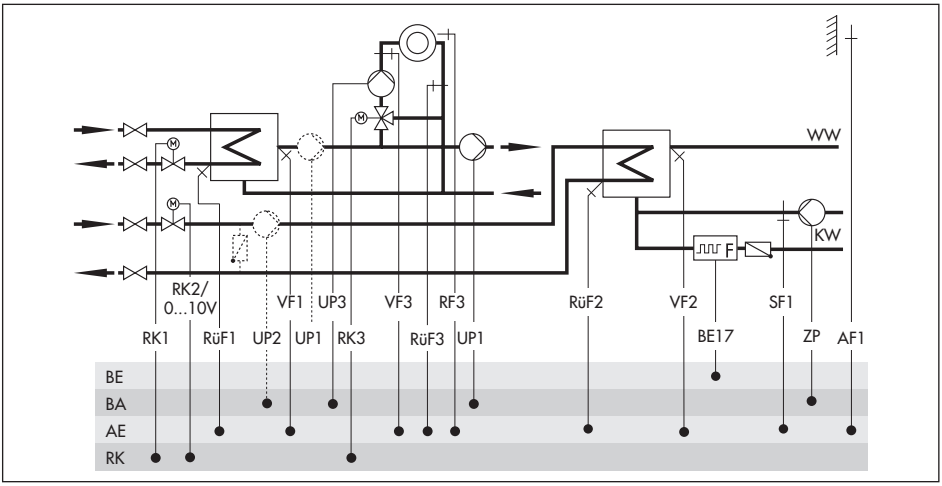

System	12.9-1	12.9-2
	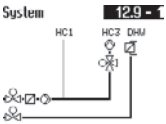	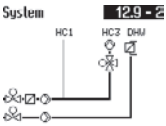
Integration of UP2	Without	With
Default setting		
CO1 > F02	- 1 (with AF1)	- 1 (with AF1)
CO1 > F03	- 1 (with RüF1)	- 1 (with RüF1)
CO3 > F01	- 0 (without RF3)	- 0 (without RF3)
CO3 > F02	- 0 (without AF2 in RK3)	- 0 (without AF2 in RK3)
CO3 > F03	- 0 (without RüF3)	- 0 (without RüF3)
CO4 > F01	- 0 (without SF1)	- 0 (without SF1)
CO4 > F03	- 0 (without RüF2)	- 0 (without RüF2)
CO4 > F04	- 0 (without flow rate sensor)	- 0 (without flow rate sensor)
CO5 > F07	- 0 (without error message at terminal 37)	- 0 (without error message at terminal 37)
CO5 > F14	- 0 (without operation UP1)	- 0 (without operation UP1)

Systems Anl 13.0 and 13.1

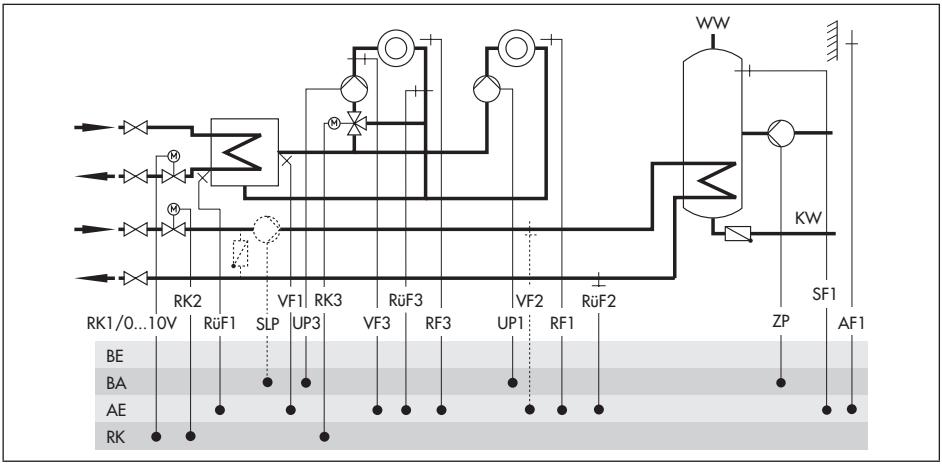

System	13.0	13.1
	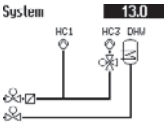	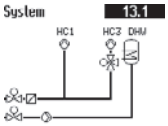
Integration of VF2 and SLP	Without	With
Default setting		
CO1 > F01	- 0 (without RF1)	- 0 (without RF1)
CO1 > F02	- 1 (with AF1)	- 1 (with AF1)
CO1 > F03	- 1 (with RüF1)	- 1 (with RüF1)
CO3 > F01	- 0 (without RF3)	- 0 (without RF3)
CO3 > F02	- 0 (without AF2 in RK3)	- 0 (without AF2 in RK3)
CO3 > F03	- 0 (without RüF3)	- 0 (without RüF3)
CO4 > F01		- 1 (with SF1)
CO4 > F02		- 0 (without SF2)
CO4 > F03	- 0 (without RüF2)	- 0 (without RüF2)
CO5 > F07	- 0 (without error message at terminal 37)	

Systems Anl 13.2-1 and 13.2-2

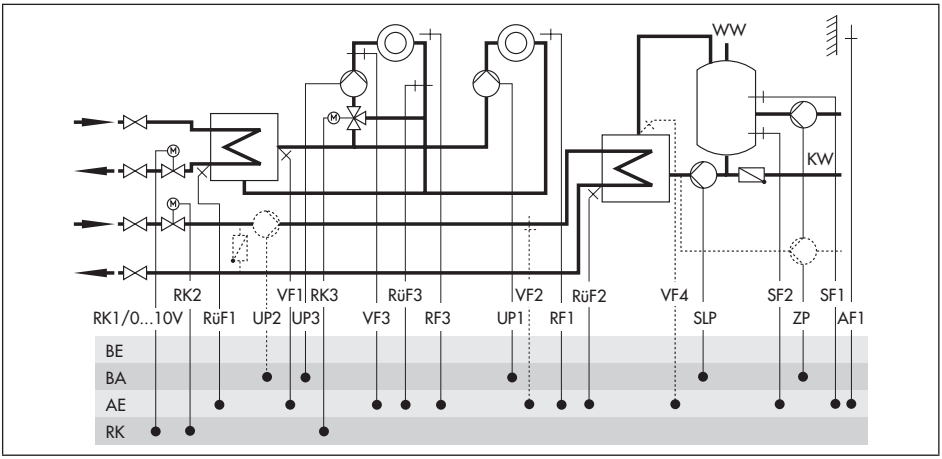

System	13.2-1	13.2-2
	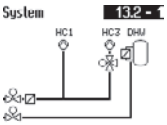	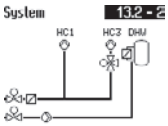
Integration of VF4 and UP2	Without, VF2 takes on the position of VF4	With, VF2 takes on the position of VF4 (provided VF4 is not assigned)
ZP integration (broken line)	Possible	Possible
Default setting		
CO1 > F01	- 0 (without RF1)	- 0 (without RF1)
CO1 > F02	- 1 (with AF1)	- 1 (with AF1)
CO1 > F03	- 1 (with RüF1)	- 1 (with RüF1)
CO3 > F01	- 0 (without RF3)	- 0 (without RF3)
CO3 > F02	- 0 (without AF2 in RK3)	- 0 (without AF2 in RK3)
CO3 > F03	- 0 (without RüF3)	- 0 (without RüF3)
CO4 > F01	- 1 (with SF1)	- 1 (with SF1)
CO4 > F02	- 1 (with SF2)	- 1 (with SF2)
CO4 > F03	- 0 (without RüF2)	- 0 (without RüF2)
CO4 > F04	- 0 (without flow rate sensor)	- 0 (without flow rate sensor)
CO4 > F05		- 0 (without VF4)

Systems Anl 13.6-1 and 13.6-2

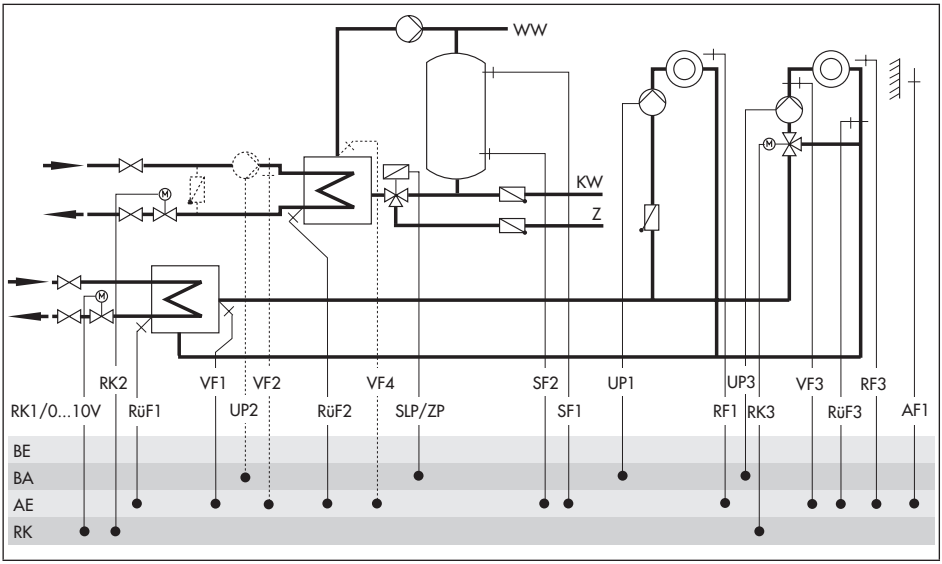

System	13.6-1	13.6-2
	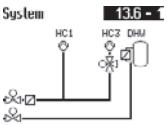	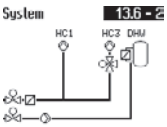
Install a continuously running pump in the DHW circuit and connect it directly to the main power supply.		
Integration of VF4 and UP2	Without, VF2 takes on the position of VF4	With, VF2 takes on the position of VF4 (provided VF4 is not assigned)
Default setting		
CO1 > F01	- 0 (without RF1)	- 0 (without RF1)
CO1 > F02	- 1 (with AF1)	- 1 (with AF1)
CO3 > F01	- 0 (without RF3)	- 0 (without RF3)
CO3 > F02	- 0 (without AF2 in RK3)	- 0 (without AF2 in RK3)
CO3 > F03	- 0 (without RüF3)	- 0 (without RüF3)
CO4 > F01	- 1 (with SF1)	- 1 (with SF1)
CO4 > F02	- 1 (with SF2)	- 1 (with SF2)
CO4 > F03	- 0 (without RüF2)	- 0 (without RüF2)
CO4 > F05		- 0 (without VF4)

Systems Anl 13.9-1 and 13.9-2

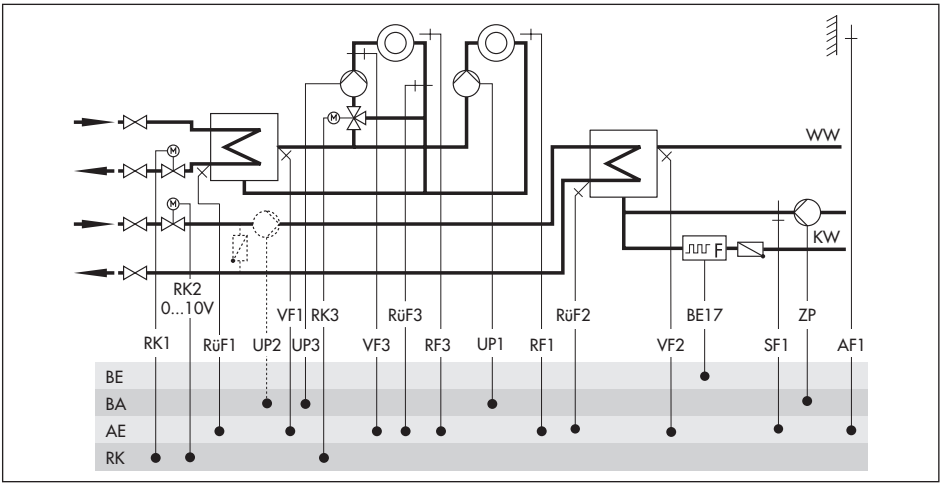

System	13.9-1	13.9-2
	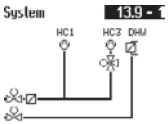	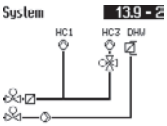
Integration of UP2	Without	With
Default setting		
CO1 > F01	- 0 (without RF1)	- 0 (without RF1)
CO1 > F02	- 1 (with AF1)	- 1 (with AF1)
CO1 > F03	- 1 (with RüF1)	- 1 (with RüF1)
CO3 > F01	- 0 (without RF3)	- 0 (without RF3)
CO3 > F02	- 0 (without AF2 in RK3)	- 0 (without AF2 in RK3)
CO3 > F03	- 0 (without RüF3)	- 0 (without RüF3)
CO4 > F01	- 0 (without SF1)	- 0 (without SF1)
CO4 > F03	- 0 (without RüF2)	- 0 (without RüF2)
CO4 > F04	- 0 (without flow rate sensor)	- 0 (without flow rate sensor)
CO5 > F07	- 0 (without error message at terminal 37)	- 0 (without error message at terminal 37)

Systems Anl 14.1 and 14.2

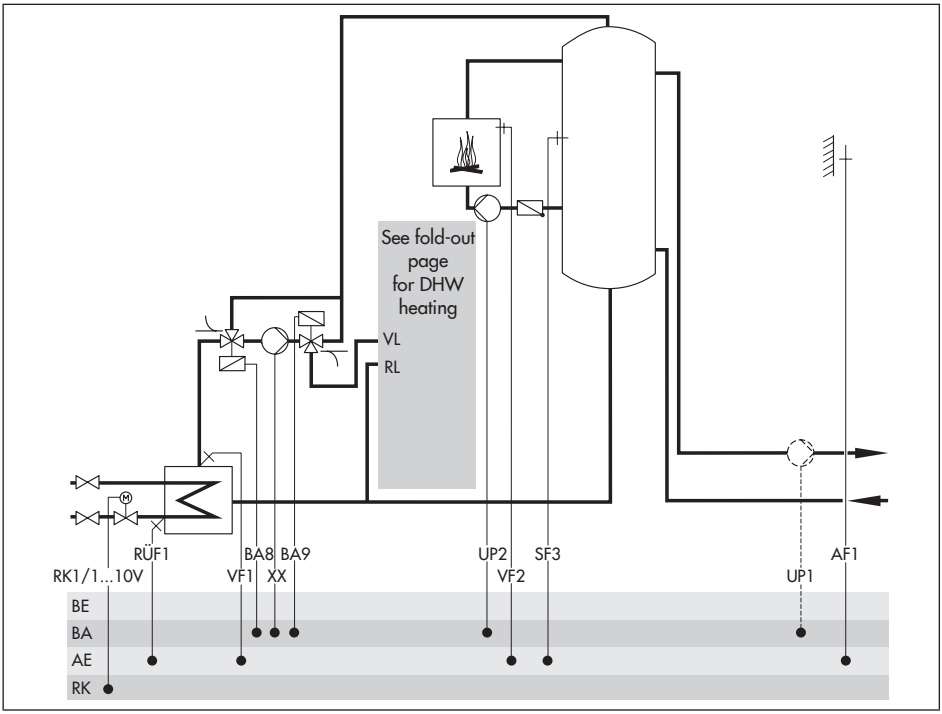

System	14.1	14.2
	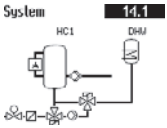	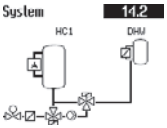
DHW type	1	2
XX =	SLP	UP1
UP1 integration (broken line)	Possible	Not possible
Default setting		
CO1 > F02	- 1 (with AF1)	- 1 (with AF1)
CO1 > F03	- 1 (with RüF1)	- 1 (with RüF1)
CO4 > F01	- 1 (with SF1)	- 1 (with SF1)
CO4 > F02	- 0 (without SF2)	- 1 (with SF2)
CO5 > F07	- 0 (without error message at terminal 46)	- 0 (without error message at terminal 46)

System Anl 14.3

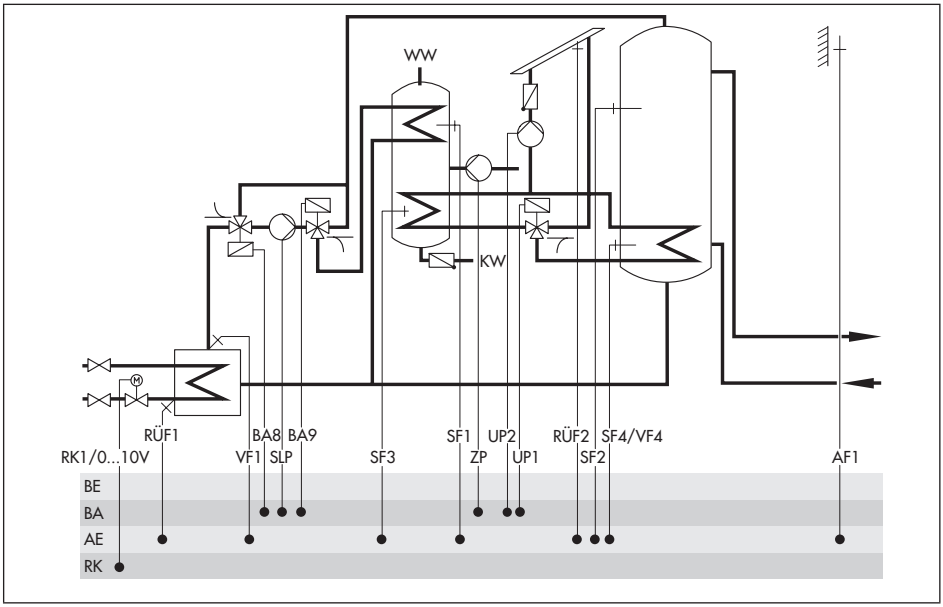

System	14.3
	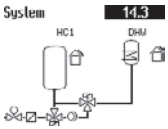
Default setting	
CO1 > F02	- 1 (with AF1)
CO1 > F03	- 1 (with RüF1)
CO4 > F01	- 1 (with SF1)
CO5 > F07	- 0 (without error message at terminal 46)

System Anl 15.0

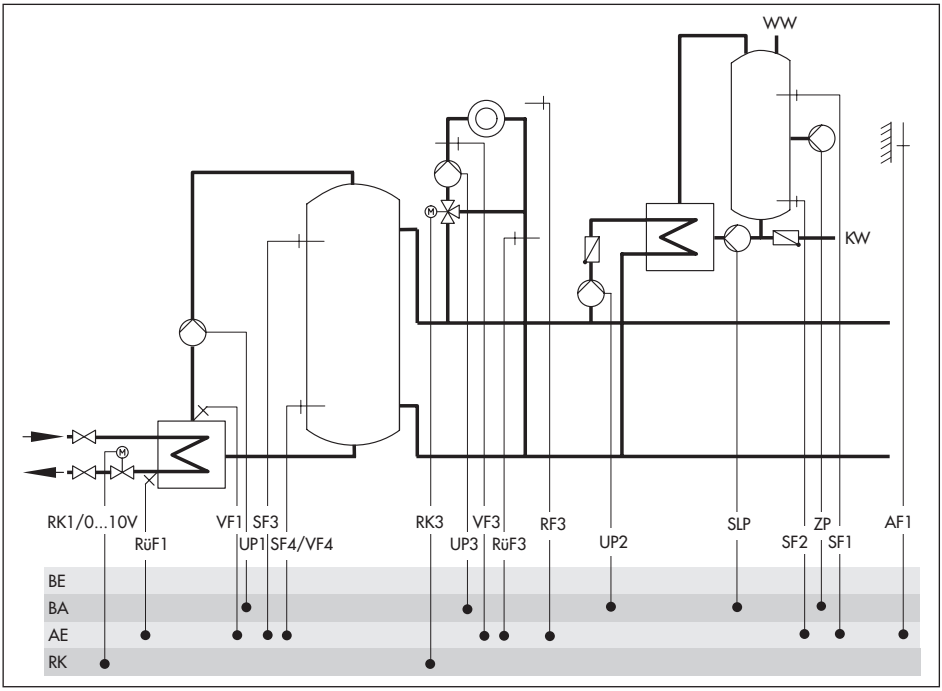

System	15.0
	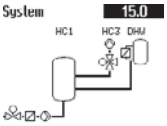
Default setting	
CO1 > F02	- 1 (with AF1)
CO1 > F03	- 1 (with RüF1)
CO3 > F01	- 0 (without RF3)
CO3 > F02	- 0 (without AF3)
CO3 > F03	- 0 (without RüF3)
CO4 > F01	- 1 (with SF1)
CO4 > F02	- 0 (without SF2)
CO4 > F03	- 0 (without RüF2)
CO5 > F07	- 0 (without error message at terminal 43)

Systems Anl 15.1 and 15.2

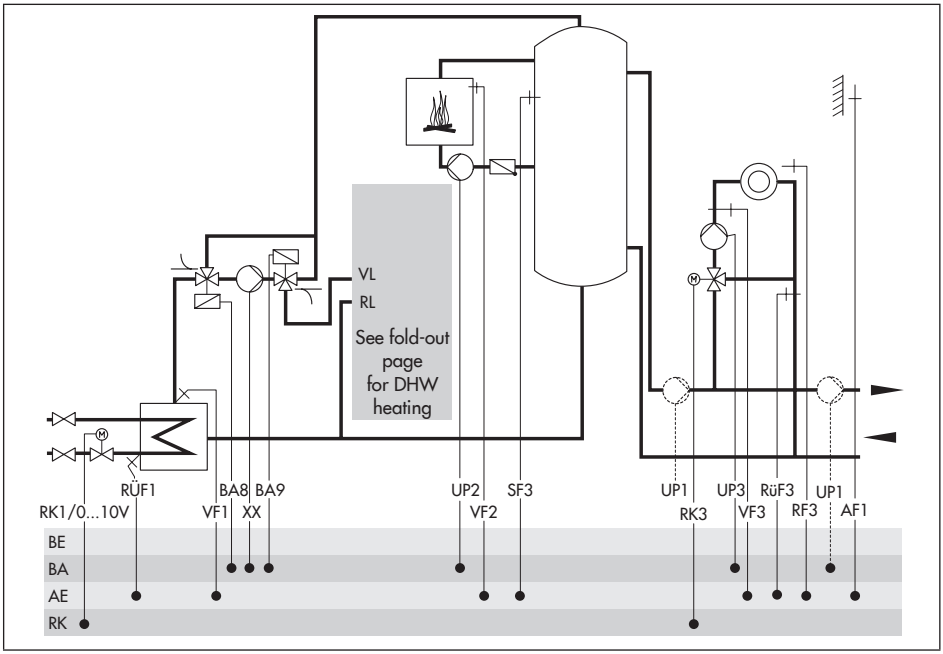

System	15.1	15.2
	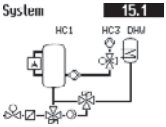	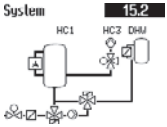
DHW type	1	2
XX =	SLP (UP1 can be used as a feeder pump)	UP1 (as a result, UP1 is not available as a feeder pump)
Default setting		
CO1 > F01	- 0 (without RF1)	- 0 (without RF1)
CO1 > F02	- 1 (with AF1)	- 1 (with AF1)
CO1 > F03	- 1 (with RüF1)	- 1 (with RüF1)
CO3 > F01	- 0 (without RF3)	- 0 (without RF3)
CO3 > F02	- 0 (without AF2 in RK3)	- 0 (without AF2 in RK3)
CO3 > F03	- 0 (without RüF3)	- 0 (without RüF3)
CO4 > F01	- 1 (with SF1)	- 1 (with SF1)
CO4 > F02	- 0 (without SF2)	- 1 (with SF2)
CO5 > F14	- 0 (without operation UP1)	

System Anl 15.3

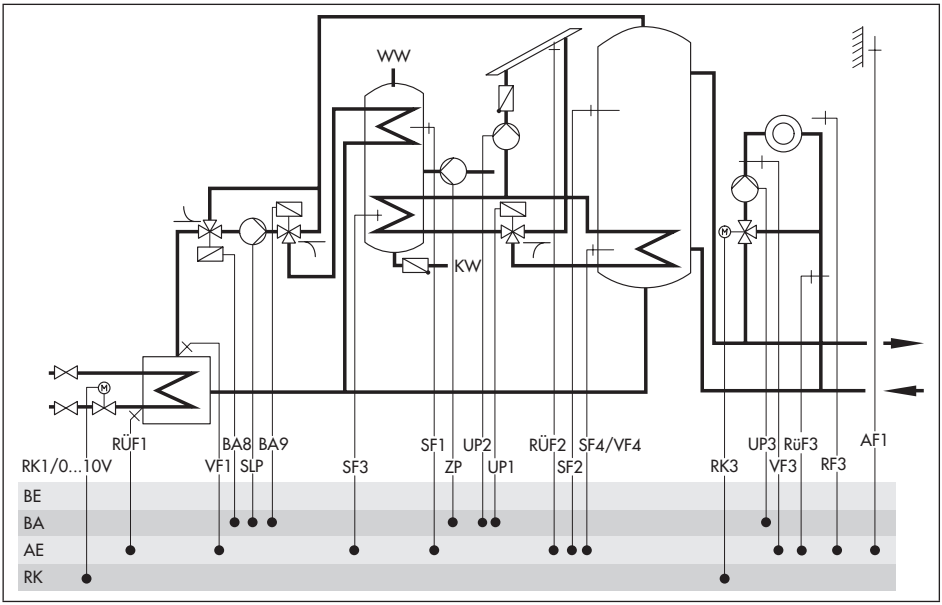

System	15.3
	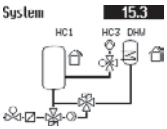
Default setting	
CO1 > F02	- 1 (with AF1)
CO1 > F03	- 1 (with RüF1)
CO3 > F01	- 0 (without RF3)
CO3 > F02	- 0 (without AF2 in RK3)
CO3 > F03	- 0 (without RüF3)
CO4 > F01	- 1 (with SF1)

System Anl 15.4

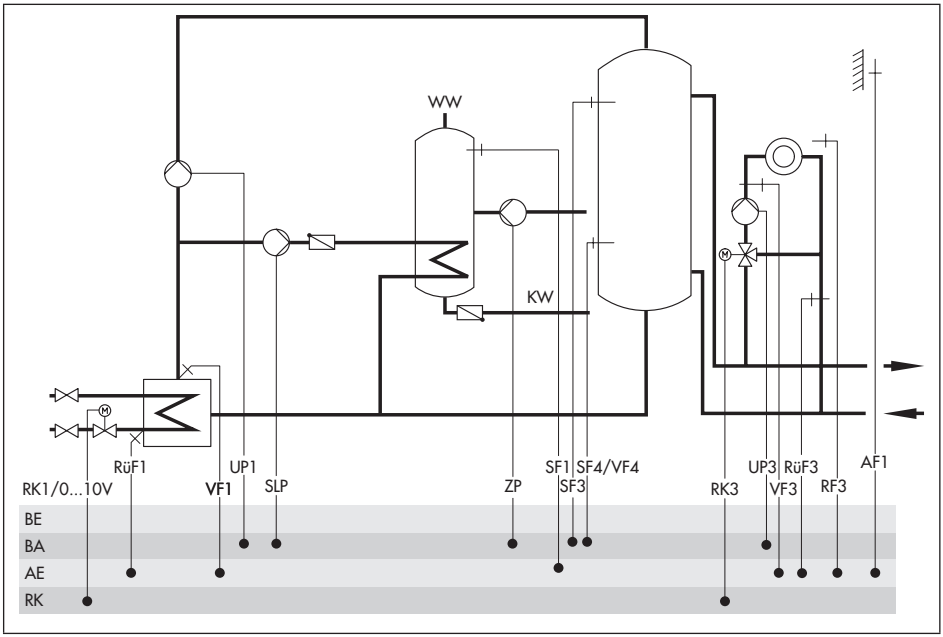

System	15.4
	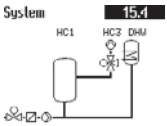
Default setting	
CO1 > F02	- 1 (with AF1)
CO1 > F03	- 1 (with RüF1)
CO3 > F01	- 0 (without RF3)
CO3 > F02	- 0 (without AF2 in RK3)
CO3 > F03	- 0 (without RüF3)
CO4 > F01	- 1 (with SF1)
CO5 > F07	- 0 (without error message at terminal 43)

System Anl 15.5

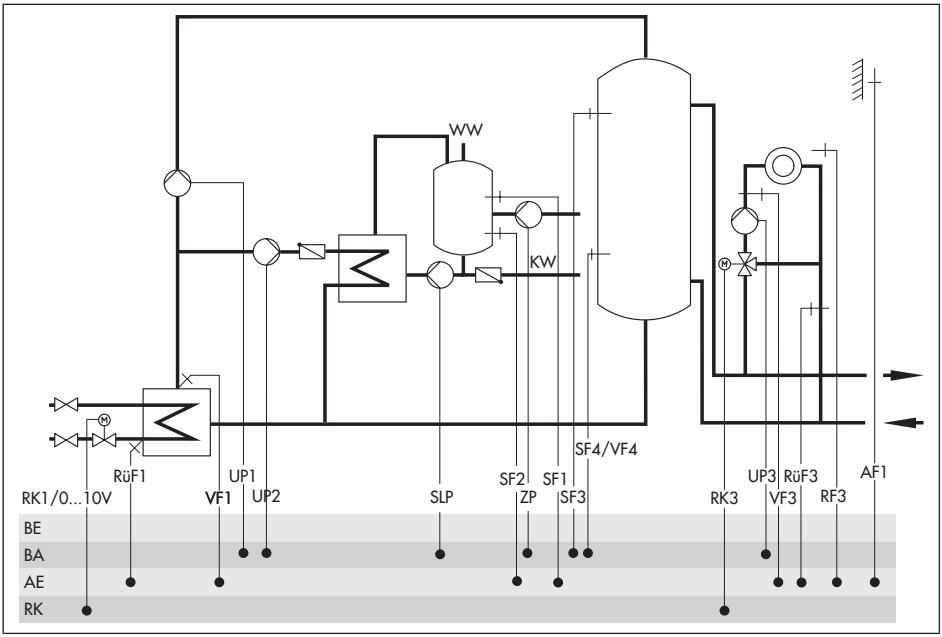

System	15.5
	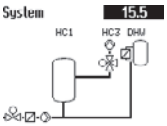
Default setting	
CO1 > F02	- 1 (with AF1)
CO1 > F03	- 1 (with RüF1)
CO3 > F01	- 0 (without RF3)
CO3 > F02	- 0 (without AF2 in RK3)
CO3 > F03	- 0 (without RüF3)
CO4 > F01	- 1 (with SF1)
CO4 > F02	- 1 (with SF2)
CO5 > F07	- 0 (without error message at terminal 43)

System Anl 16.0

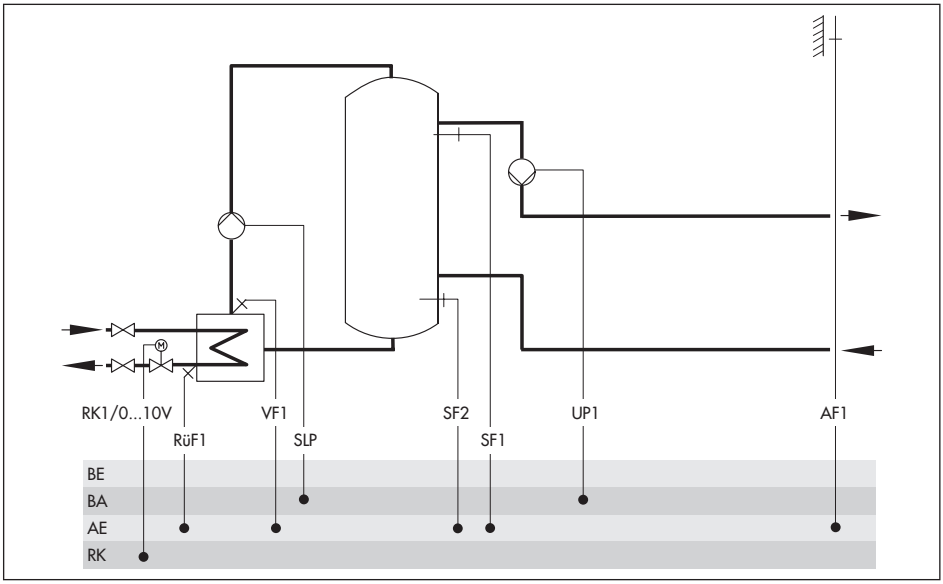

System	16.0
	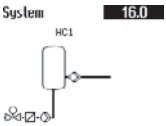
Default setting	
CO1 > F02	- 1 (with AF1)
CO1 > F03	- 1 (with RüF1)
CO5 > F07	- 0 (without error message at terminal 43)

System Anl 16.1

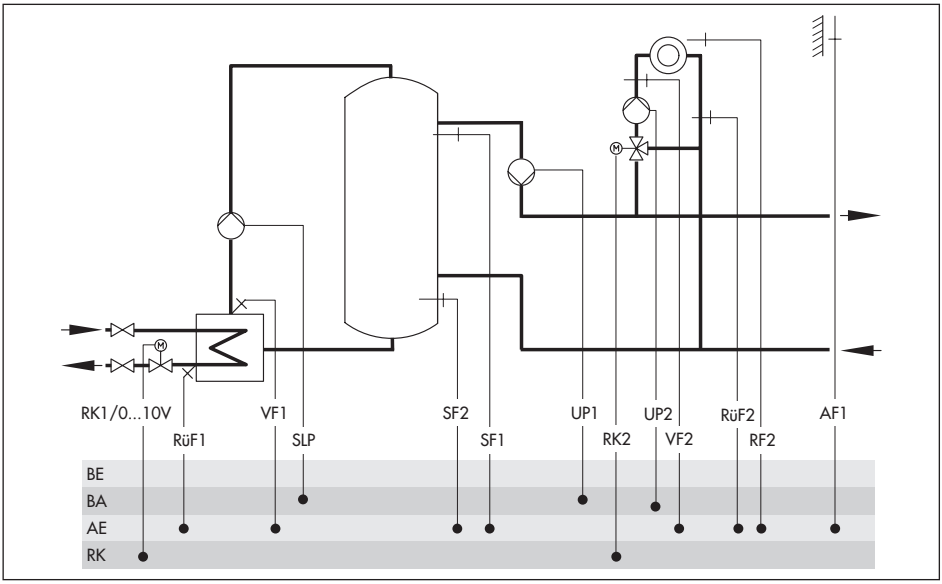

System	16.1
	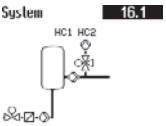
Default setting	
CO1 > F02	- 1 (with AF1)
CO1 > F03	- 1 (with RüF1)
CO2 > F01	- 0 (without RF2)
CO2 > F02	- 0 (without AF2 in RK2)
CO2 > F03	- 0 (without RüF2)
CO5 > F07	- 0 (without error message at terminal 38)
CO5 > F14	- 0 (without operation UP1)

System Anl 16.2

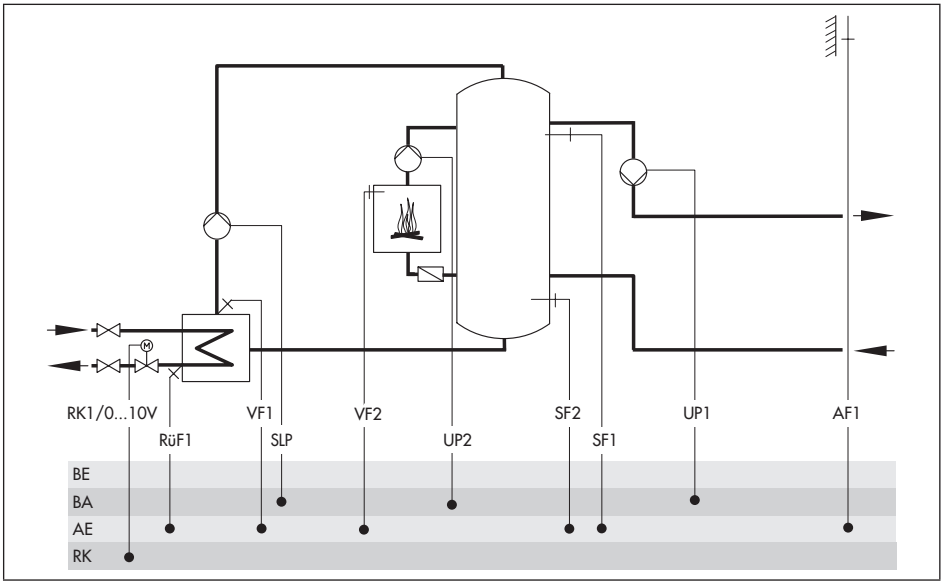

System	16.2
	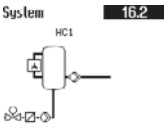
Default setting	
CO1 > F02	- 1 (with AF1)
CO1 > F03	- 1 (with RüF1)
CO5 > F07	- 0 (without error message at terminal 43)

System Anl 16.3

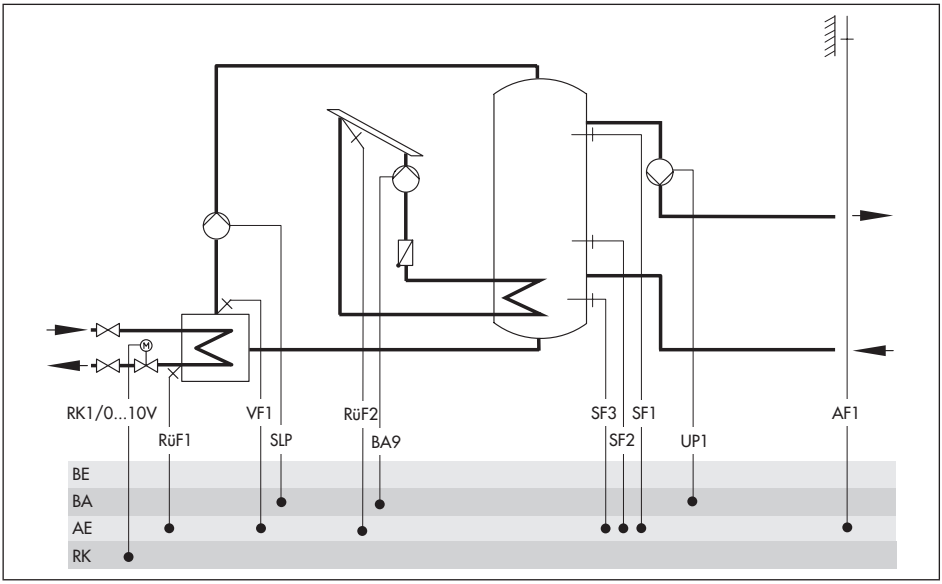

System	16.3
	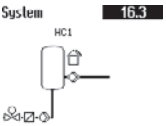
Default setting	
CO1 > F02	- 1 (with AF1)
CO1 > F03	- 1 (with RüF1)
CO5 > F07	- 0 (without error message at terminal 43)

System Anl 16.4

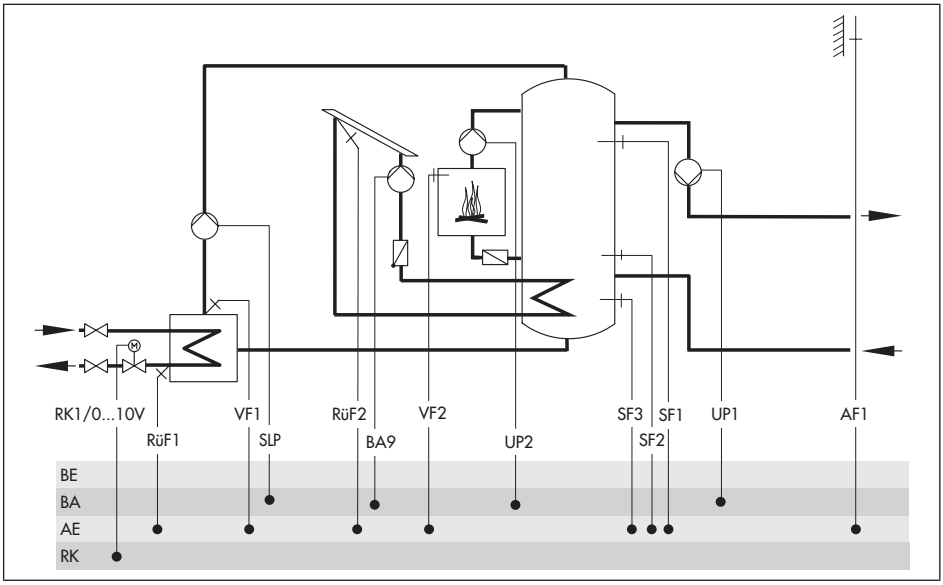

System	16.4
	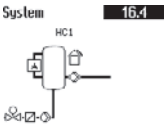
Default setting	
CO1 > F02	- 1 (with AF1)
CO1 > F03	- 1 (with RüF1)
CO5 > F07	- 0 (without error message at terminal 43)

System Anl 16.8

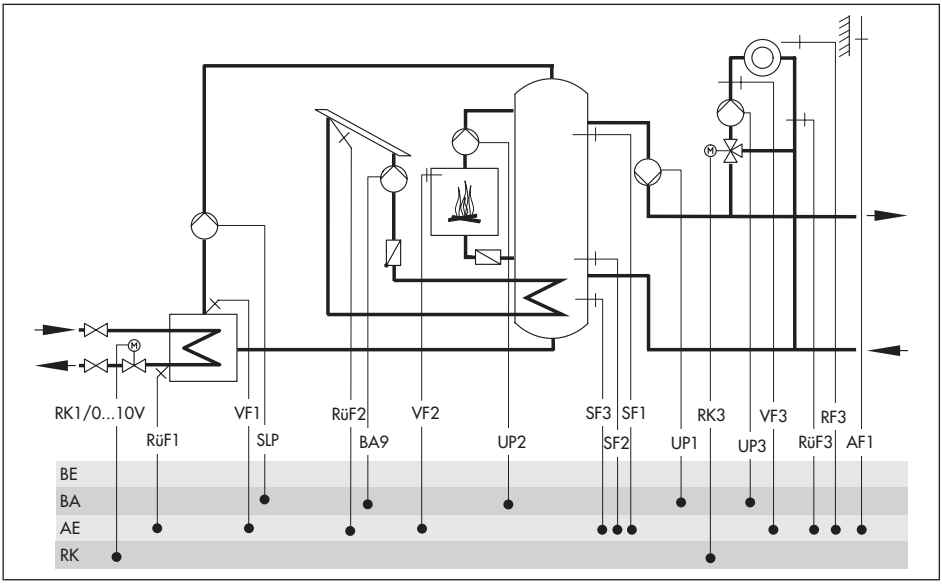

System	16.5
	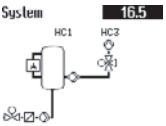
Default setting	
CO1 > F02	- 1 (with AF1)
CO1 > F03	- 1 (with RüF1)
CO3 > F01	- 0 (without RF3)
CO3 > F02	- 0 (without AF2 in RK3)
CO3 > F03	- 0 (without RüF3)
CO5 > F07	- 0 (without error message at terminal 43)
CO5 > F14	- 0 (without operation UP1)

System Anl 16.6

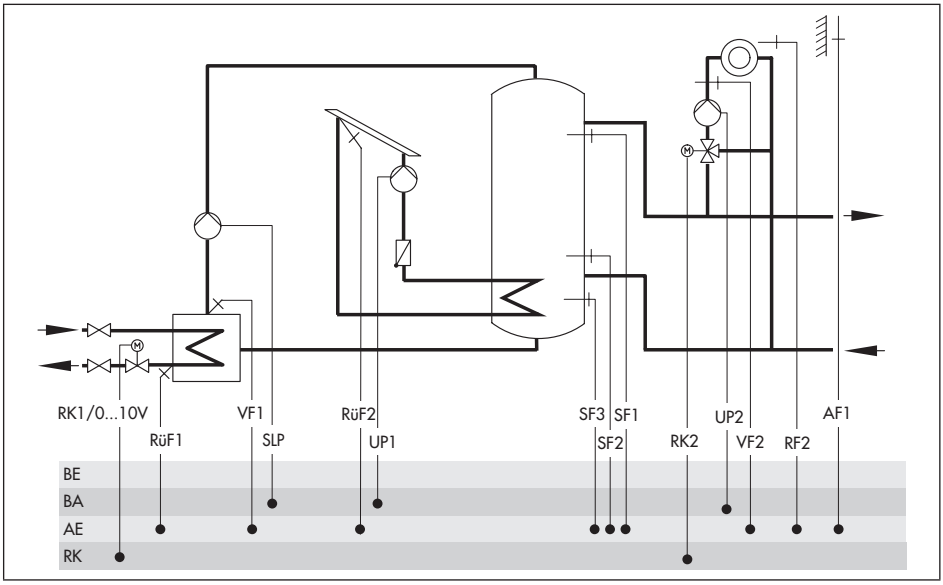

System	16.6
	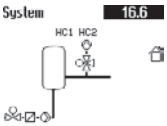
Default setting	
CO1 > F02	- 1 (with AF1)
CO1 > F03	- 1 (with RüF1)
CO2 > F01	- 0 (without RF2)
CO2 > F02	- 0 (without AF2 in RK2)
CO5 > F07	- 0 (without error message at terminal 38)

System Anl 16.7

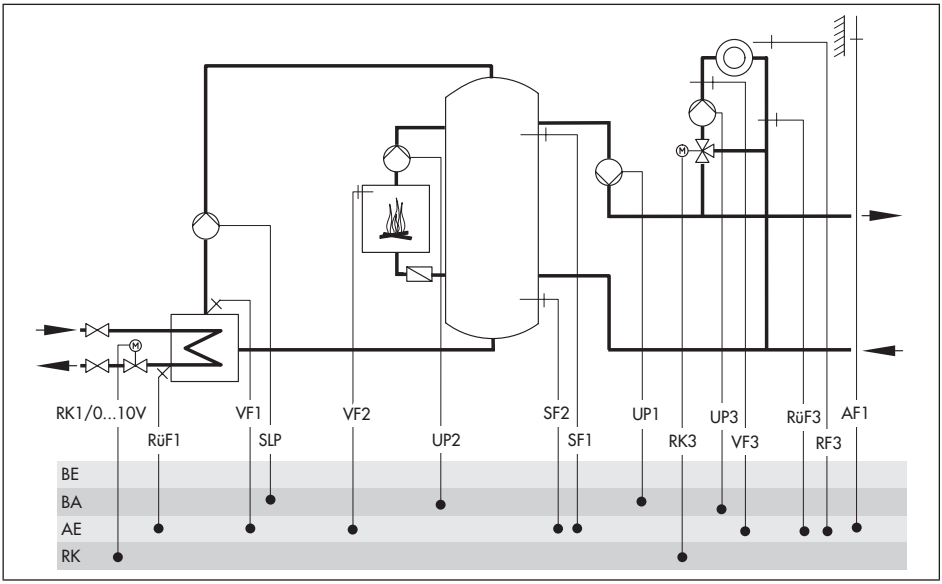

System	16.7
	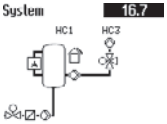
Default setting	
CO1 > F02	- 1 (with AF1)
CO1 > F03	- 1 (with RüF1)
CO3 > F01	- 0 (without RF3)
CO3 > F02	- 0 (without AF2 in RK3)
CO3 > F03	- 0 (without RüF3)
CO5 > F07	- 0 (without error message at terminal 43)
CO5 > F14	- 0 (without operation UP1)

System Anl 16.8

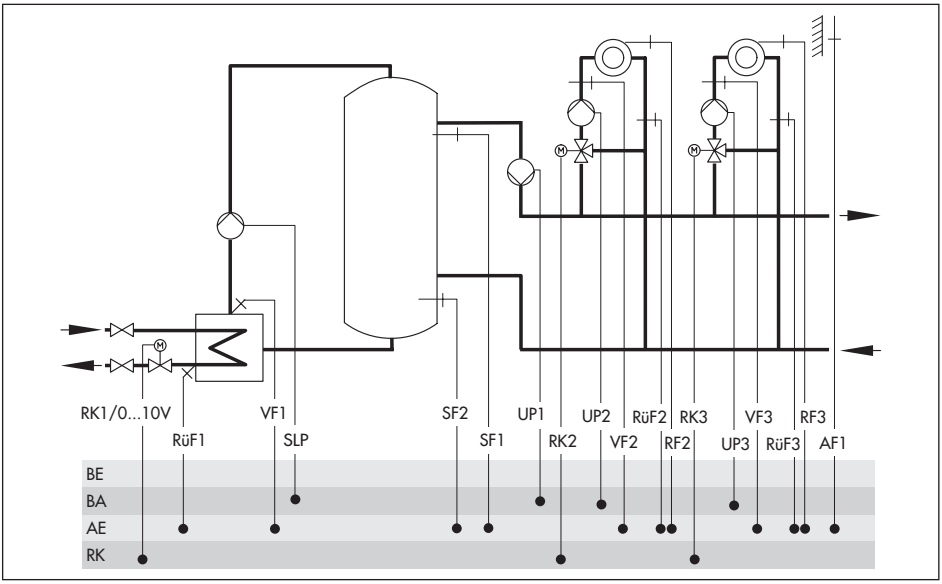

System	16.8
	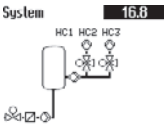

With CO1 > F02 - 1 and CO2 > F02 - 1 and CO3 > F02 - 0, AF1 is assigned to heating circuit RK3 and AF2 to heating circuit RK2.

With CO1 > F02 - 1 and CO2 > F02 - 0 and CO3 > F02 - 1, AF1 is assigned to heating circuit RK1 and AF2 to heating circuit RK3.

Default setting	
CO1 > F02	- 1 (with AF1)
CO1 > F03	- 1 (with RüF1)
CO2 > F01	- 0 (without RF2)
CO2 > F02	- 0 (without AF2 in RK2)
CO2 > F03	- 0 (without RüF2)
CO3 > F01	- 0 (without RF3)
CO3 > F02	- 0 (without AF2 in RK3)
CO3 > F03	- 0 (without RüF3)
CO5 > F07	- 0 (without error message at terminal 38)
CO5 > F14	- 0 (without operation UP1)

System Anl 21.0

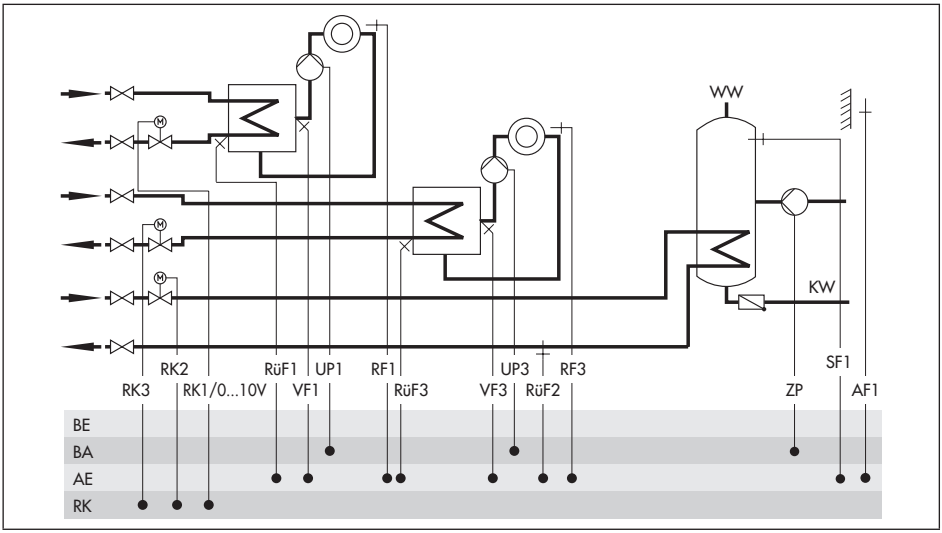

System	21.0
	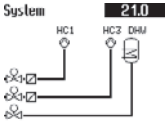
Default setting	
CO1 > F01	- 0 (without RF1)
CO1 > F02	- 1 (with AF1)
CO1 > F03	- 1 (with RüF1)
CO3 > F01	- 0 (without RF3)
CO3 > F02	- 0 (without AF2 in RK3)
CO3 > F03	- 1 (with RüF3)
CO4 > F03	- 0 (without RüF2)
CO5 > F07	- 0 (without error message at terminal 37)

System Anl 21.1-1

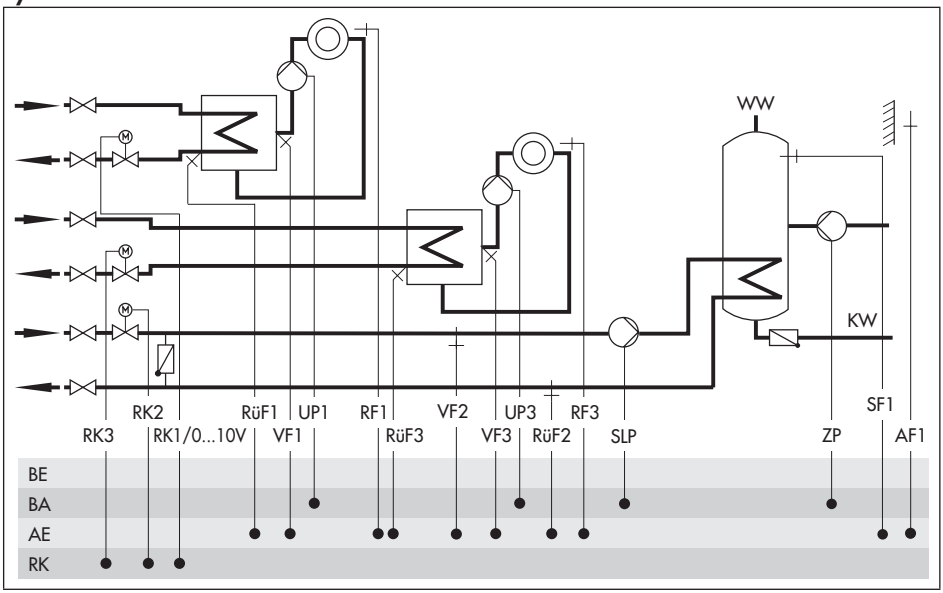

System	21.1-1
	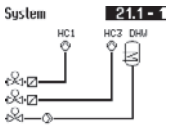
Default setting	
CO1 > F01	- 0 (without RF1)
CO1 > F02	- 1 (with AF1)
CO1 > F03	- 0 (without RüF1)
CO3 > F01	- 0 (without RF3)
CO3 > F02	- 0 (without AF2 in RK3)
CO3 > F03	- 0 (without RüF3)
CO4 > F01	- 1 (with SF1)
CO4 > F02	- 0 (without SF2)
CO4 > F03	- 0 (without RüF2)

Systems Anl 21.1-2

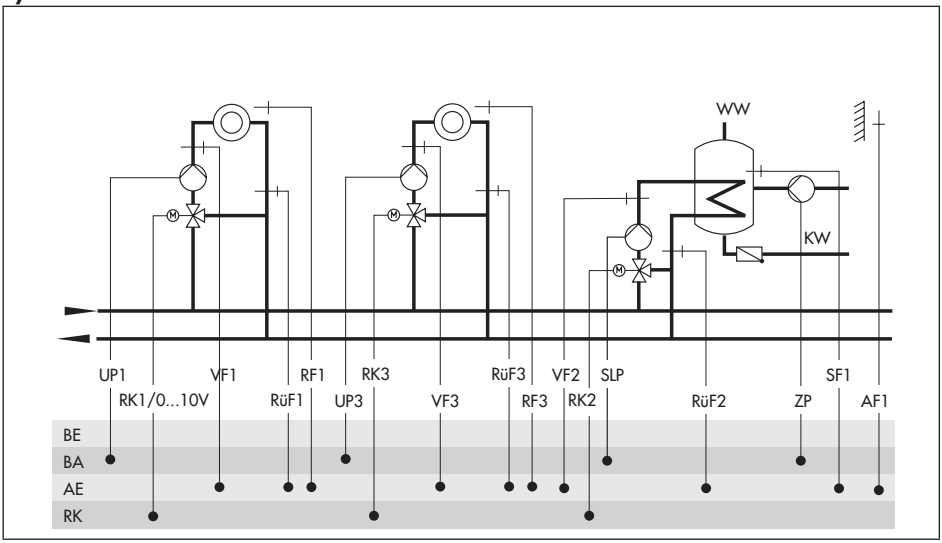

System	21.1-2
	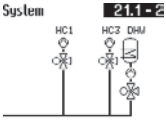
Default setting	
CO1 > F01	- 0 (without RF1)
CO1 > F02	- 1 (with AF1)
CO1 > F03	- 0 (without RüF1)
CO3 > F01	- 0 (without RF3)
CO3 > F02	- 0 (without AF2 in RK3)
CO3 > F03	- 0 (without RüF3)
CO4 > F01	- 1 (with SF1)
CO4 > F02	- 0 (without SF2)
CO4 > F03	- 0 (without RüF2)

Systems Anl 21.2-1 and 21.2-2

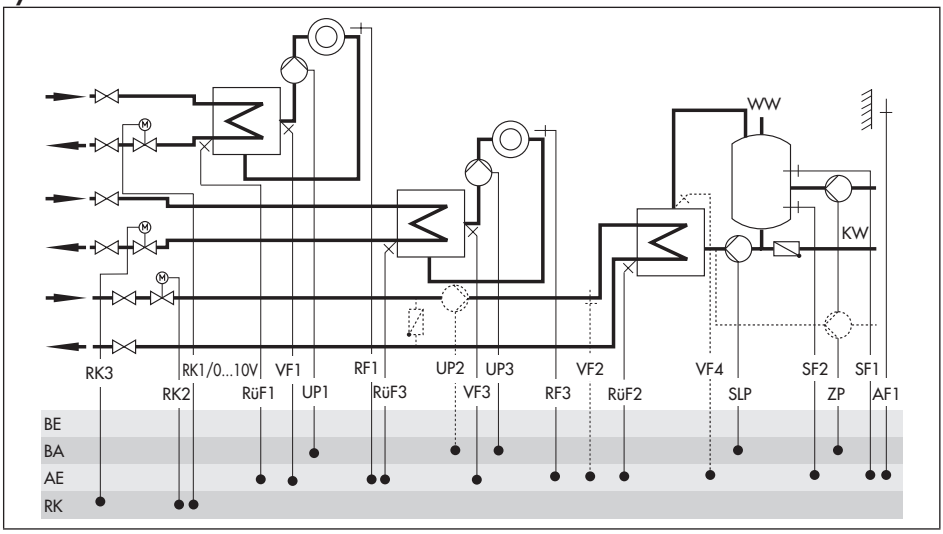

System	21.2-1	21.2-2
	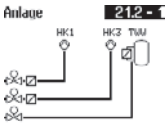	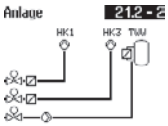
Integration of VF4 and UP2	Without, VF2 takes on the position of VF4	With, VF2 takes on the position of VF4 (provided VF4 is not assigned)
ZP integration (broken line)	Possible	Possible
Default setting		
CO1 > F01	- 0 (without RF1)	- 0 (without RF1)
CO1 > F02	- 1 (with AF1)	- 1 (with AF1)
CO1 > F03	- 1 (with RüF1)	- 1 (with RüF1)
CO3 > F01	- 0 (without RF3)	- 0 (without RF3)
CO3 > F02	- 0 (without AF2 in RK3)	- 0 (without AF2 in RK3)
CO3 > F03	- 1 (with RüF3)	- 1 (with RüF3)
CO4 > F01	- 1 (with SF1)	- 1 (with SF1)
CO4 > F02	- 1 (with SF2)	- 1 (with SF2)
CO4 > F03	- 0 (without RüF2)	- 0 (without RüF2)
CO4 > F05		- 0 (without VF4)

System Anl 21.2-3

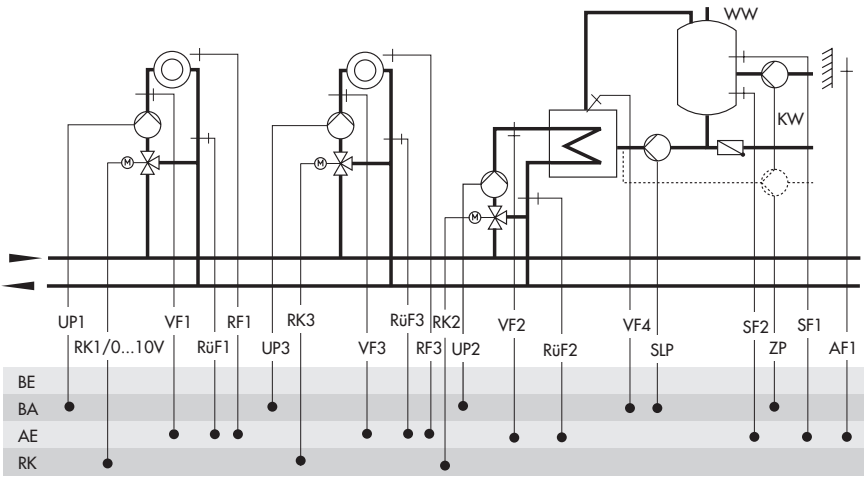

System	21.2-3
	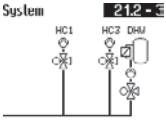
	VF2 takes on the position of VF4 (provided VF4 is not assigned)
Default setting	
CO1 > F01	- 0 (without RF1)
CO1 > F02	- 1 (with AF1)
CO1 > F03	- 1 (with RüF1)
CO3 > F01	- 0 (without RF3)
CO3 > F02	- 0 (without AF2 in RK3)
CO3 > F03	- 1 (with RüF3)
CO4 > F01	- 1 (with SF1)
CO4 > F02	- 1 (with SF2)
CO4 > F03	- 0 (without RüF2)
CO4 > F05	- 0 (without VF4)

Systems Anl 21.9-1 and 21.9-2

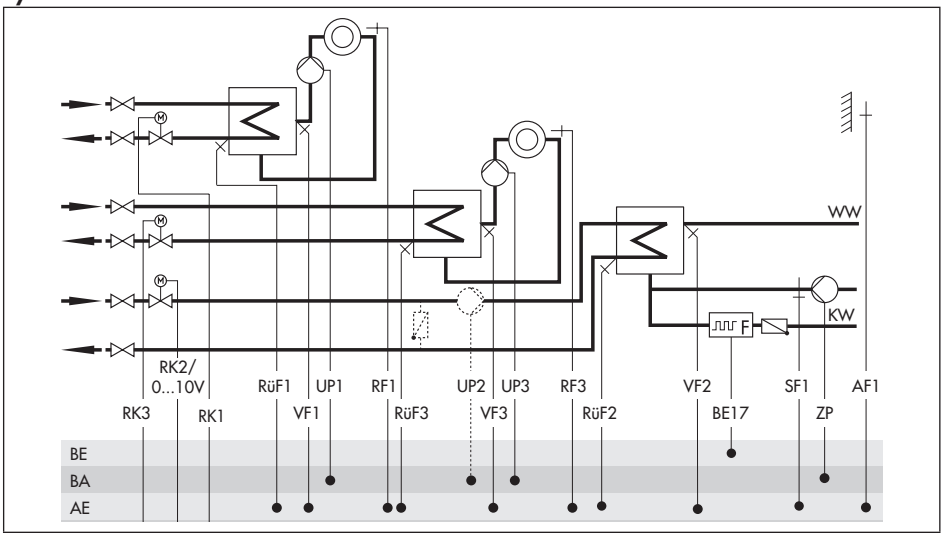

System	21.9-1	21.9-2
	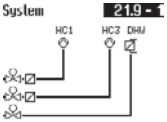	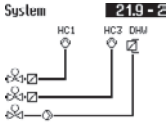
Integration of UP2	Without	With
Default setting		
CO1 > F01	- 0 (without RF1)	- 0 (without RF1)
CO1 > F02	- 1 (with AF1)	- 1 (with AF1)
CO1 > F03	- 1 (with RüF1)	- 1 (with RüF1)
CO3 > F01	- 0 (without RF3)	- 0 (without RF3)
CO3 > F02	- 0 (without AF2 in RK3)	- 0 (without AF2 in RK3)
CO3 > F03	- 1 (with RüF3)	- 1 (with RüF3)
CO4 > F01	- 0 (without SF1)	- 0 (without SF1)
CO4 > F03	- 0 (without RüF2)	- 0 (without RüF2)
CO4 > F04	- 0 (without flow rate sensor)	- 0 (without flow rate sensor)
CO5 > F07	- 0 (without error message at terminal 37)	- 0 (without error message at terminal 37)

System Anl 25.0-1

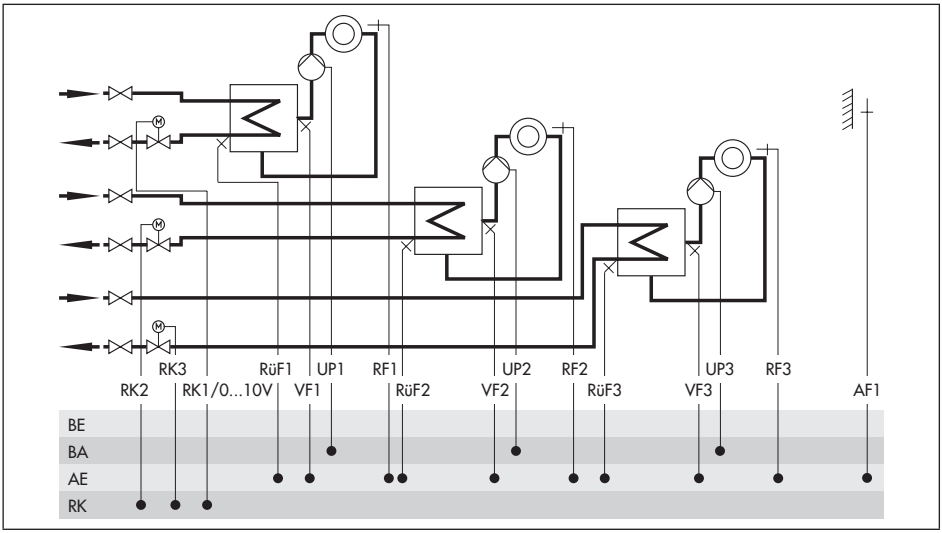

System	25.0-1
	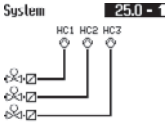
Default setting	
CO1 > F01	- 0 (without RF1)
CO1 > F02	- 1 (with AF1)
CO1 > F03	- 1 (with RüF1)
CO2 > F01	- 0 (without RF2)
CO2 > F02	- 0 (without AF2 in RK2)
CO2 > F03	- 1 (with RüF2)
CO3 > F01	- 0 (without RF3)
CO3 > F02	- 0 (without AF2 in RK3)
CO3 > F03	- 1 (with RüF3)
CO5 > F07	- 0 (without error message at terminal 37)

System Anl 25.0-2

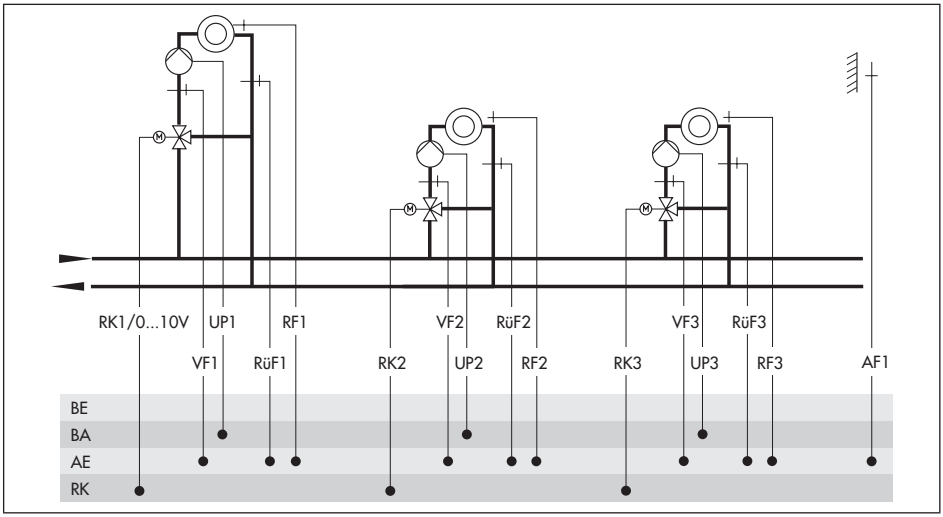

System	25.0-2
	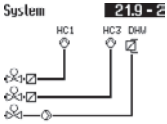
Default setting	
CO1 > F01	- 0 (without RF1)
CO1 > F02	- 1 (with AF1)
CO1 > F03	- 1 (with RüF1)
CO2 > F01	- 0 (without RF2)
CO2 > F02	- 0 (without AF2 in RK2)
CO2 > F03	- 1 (with RüF2)
CO3 > F01	- 0 (without RF3)
CO3 > F02	- 0 (without AF2 in RK3)
CO3 > F03	- 1 (with RüF3)
CO5 > F07	- 0 (without error message at terminal 37)

System Anl 25.5

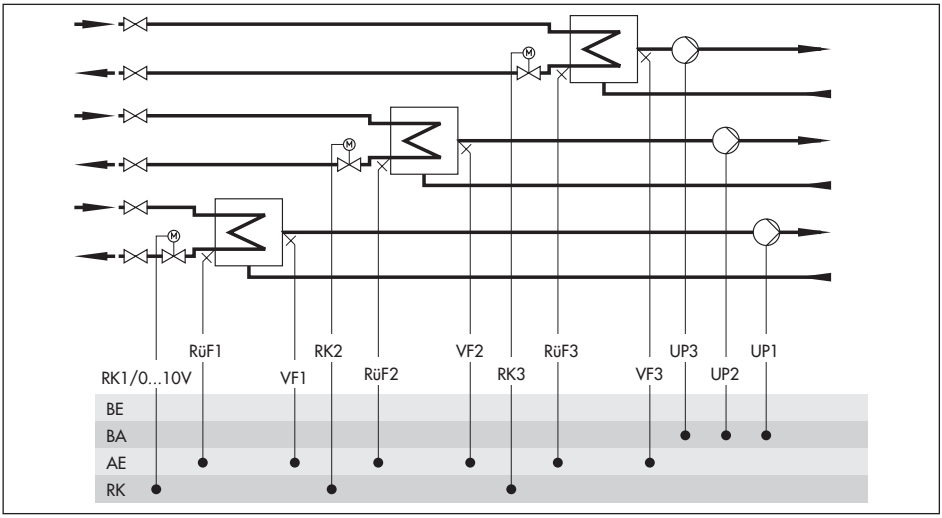

System	25.5
	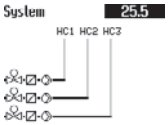
Default setting	
CO1 > F03	- 1 (with RüF1)
CO2 > F03	- 1 (with RüF2)
CO3 > F03	- 1 (with RüF3)
CO5 > F07	- 0 (without error message at terminal 37)

6 Functions of the heating circuit

Which controller functions are available depends on the selected system code number (Anl).

6.1 Outdoor-temperature-controlled control

When outdoor-temperature-compensated control is used, the flow temperature is controlled based on the outdoor temperature. The heating characteristic in the controller defines the flow temperature set point as a function of the outdoor temperature (see Fig. 3). The outdoor temperature required for outdoor-temperature-compensated control can either be measured at an outdoor sensor or received over the 0 to 10 V input.

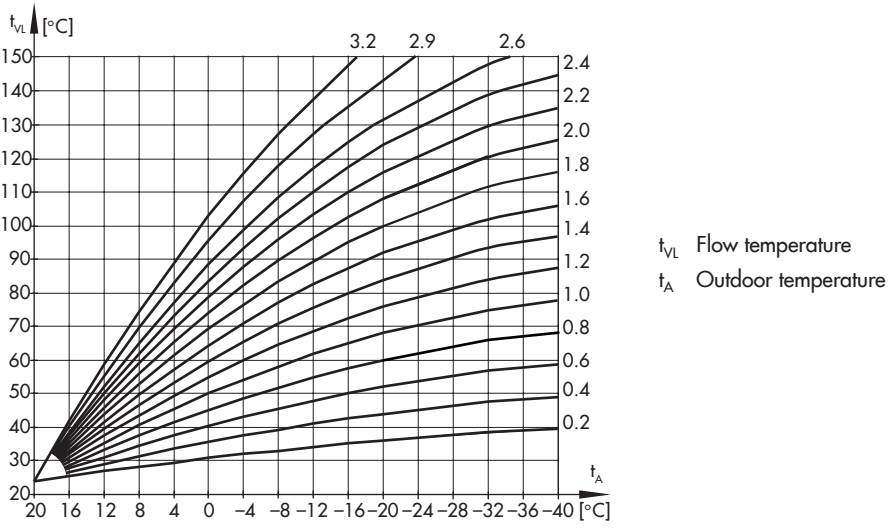

Fig. 3: *Gradient characteristics*

Functions	WE	Configuration
Outdoor sensor	0	CO1, 2, 3 > F02 - 1
0 to 10 V signal for outdoor temperature	0 Input –20 °C 50 °C	CO5 > F23 - 1 Direction: Input Lower transmission range: –30 to 100 °C Upper transmission range: –30 to 100 °C

6.1.1 Gradient characteristic

Basically, the following rule applies: a decrease in the outdoor temperature causes the flow temperature to increase in order to keep the room temperature constant. By varying the gradient and level parameters, you can adapt the characteristic to your individual requirements:

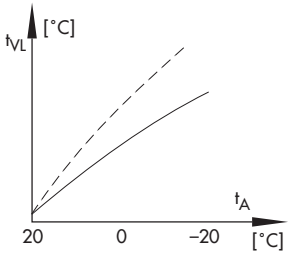

The gradient needs to be increased if the room temperature drops when it is cold outside.

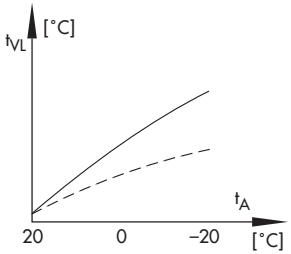

The gradient needs to be decreased if the room temperature drops when it is cold outside.

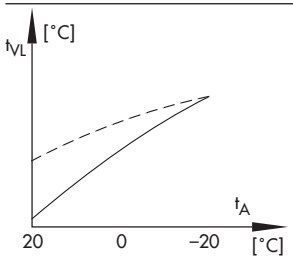

The level needs to be increased and the gradient decreased if the room temperature drops when it is mild outside.

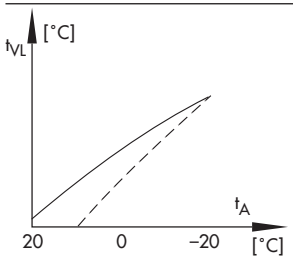

The level needs to be decreased and the gradient increased if the room temperature rises when it is mild outside.

Outside the times-of-use, reduced set points are used for control: the reduced flow set point is calculated as the difference between the adjusted values for 'Day set point' (rated room temperature) and 'Night set point' (reduced room temperature). The 'Max. flow temperature' and 'Min. flow temperature' parameters mark the upper and lower limits of the flow temperature. A separate gradient characteristic can be selected for the limitation of the return flow temperature.

Examples for adjusting the characteristic:

- Old building, radiator design 90/70: Gradient approx. 1.8
- New building, radiator design 70/55: Gradient approx. 1.4
- New building, radiator design 55/45: Gradient approx. 1.0
- Underfloor heating depending on arrangement: Gradient smaller than 0.5

Note:
Particularly for control operation without room sensor, the room temperatures set for day ('Day set point') and night ('Night set point') only become effective satisfactorily when the heating characteristic has been adapted to the building/heating surface layout.

Functions	**WE**	**Configuration**
Four-point characteristic	0	CO1, 2, 3 > F11 - 0
Parameters	**WE**	**Switch position: value range**
Day set point	20.0 °C	🌡☼: 0.0 to 40.0 °C
Night set point	15,0 °C	🌡☾: 0.0 to 40.0 °C
Parameters	**WE**	**Parameters: value range**
Flow gradient	1.8*	PA1, 2, 3 > P01:0.2 to 3.2
Level (parallel shift)	0.0 °C	PA1, 2, 3 > P02:–30.0 to 30.0 °C
Min. flow temperature	20.0 °C	PA1, 2, 3 > P06:–5.0 to 150.0 °C
Max. flow temperature	90.0 °C*	PA1, 2, 3 > P07:5.0 to 150.0 °C
* With CO1, 2, 3 > F05 - 1 the following applies:		Gradient: 0.2 to 1.0 (1.0) Max. flow temperature: 5.0 to 50.0 °C (50.0 °C)

6.1.2 Four-point characteristic

The four-point characteristic allows you to define your own heating characteristic. It is defined by four points for the outdoor temperature, flow temperature, reduced flow temperature and return flow temperature. The 'Max. flow temperature' and 'Min. flow temperature' parameters mark the upper and lower limits of the flow temperature.

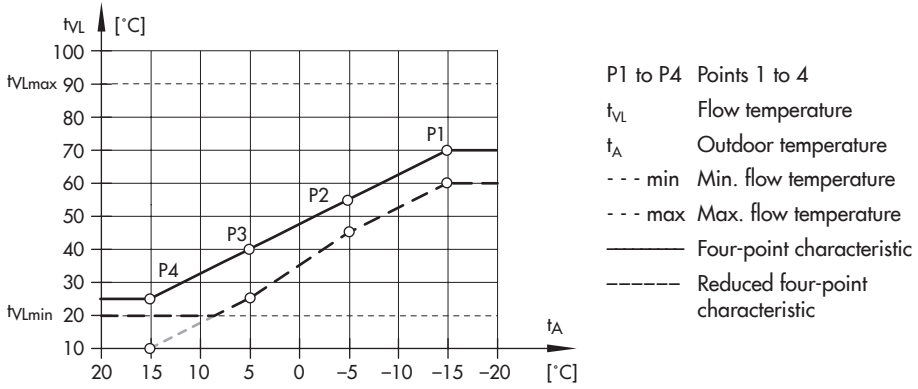

Fig. 4: *Four-point characteristic*

Note:

– *The 'Day set point' and 'Night set point' parameters are no longer available when the four-point characteristic has been selected, provided no additional functions (e.g.* **optimization**, **flash adaptation***) have been selected.*

– *The* **four-point characteristic** *function can only be activated when the* ***adaptation*** *function is not active (CO1, 2, 3 > F08 - 0).*

Functions		WE	Configuration
Adaptation		0	CO1, 2, 3 > F08 - 0
Four-point characteristic		0	CO1, 2, 3 > F11 - 1
Parameters		**WE**	**Parameters: value range**
Outdoor temperature	Point 1	–15.0 °C	PA1, 2, 3 > P05:–50.0 to 50.0 °C
	Point 2	–5.0 °C	
	Point 3	5.0 °C	
	Point 4	15,0 °C	

Parameters		WE	Parameters: value range
Flow temperature	Point 1	70.0 °C	PA1, 2, 3 > P05: –5.0 to 150.0 °C
	Point 2	55.0 °C	
	Point 3	40.0 °C	
	Point 4	25.0 °C	
Reduced flow temperature	Point 1	60.0 °C	PA1, 2, 3 > P05: –5.0 to 150.0 °C
	Point 2	40.0 °C	
	Point 3	20.0 °C	
	Point 4	20.0 °C	
Return flow temperature	Points 1 to 4	65.0 °C	PA1, 2, 3 > P05: 5.0 to 90.0 °C
Min. flow temperature		20.0 °C	PA1, 2, 3 > P06: –5.0 to 150.0 °C
Max. flow temperature		90.0 °C*	PA1, 2, 3 > P07: 5.0 to 150.0 °C

* With CO1, 2, 3 > F05 - 1 the following applies: Max. flow temperature: 5.0 to 50.0 °C (50.0 °C)

6.2 Fixed set point control

During the times-of-use, the flow temperature can be controlled according to a fixed set point. Outside the times-of-use, the controller regulates to a reduced flow temperature. Set the desired rated flow temperature as 'Day set point' and the reduced flow temperature as 'Night set point'.

Functions	WE	Configuration
Outdoor sensor		CO1, 2, 3 > F02 - 0

Parameters	WE	Switch position: value range
Day set point	50.0 °C	: Min. to max. flow temperature
Night set point	30.0 °C	: Min. to max. flow temperature

Parameters	WE	Parameters: value range
Min. flow temperature	20.0 °C	PA1, 2, 3 > P06: –5.0 to 150.0 °C
Max. flow temperature	90.0 °C	PA1, 2, 3 > P07: 5.0 to 150.0 °C

6.3 Underfloor heating/drying of jointless floors

Using function block setting CO1, 2, 3 > F05 - 1, the respective heating circuit is configured as an underfloor heating circuit. In doing so, the controller at first only limits the value ranges of the heating characteristic gradient and the maximum flow temperature in PA1, 2, 3 parameter levels:

– Value range of the gradient: 0.2 to 1.0
– Value range of the maximum flow temperature: 5 to 50 °C

In addition, it is possible to activate the **drying of jointless floors** function. In connection with this, the function block parameters are listed which appear after activating this function block. They determine the drying process: the first heating up phase starts at the entered Start temperature, which has a flow temperature of 25 °C in its default setting. In the course of 24 hours, this temperature is raised by the value entered in 'Temp. rise/day', i.e. the default setting causes the flow temperature set point to rise to 30 °C. If the maximum temperature is reached, it is kept constant for the number of days entered in 'Duration'. The 'Temp. reduction/day' parameter determines the temperature reduction downwards. If the 'Temp. reduction/day' is set to 0, the temperature maintaining phase moves directly to automatic mode.If the function block parameter 'Start temperature' is set to 25 °C and 'Temp. rise/day' to 0.0 °C, the drying functions runs as specified in Part 4 of DIN EN 1264: the drying of jointless floors function starts with a flow temperature of 25 °C, which is kept constant for three days. Afterwards, the controller switches to the maximum adjusted temperature. The further process remains unchanged. The **drying of jointless floors** function is activated using the adjusted 'Start temperature' by changing the setting 'Stop' to 'Start'. 'Start' is displayed when the drying function starts. The restarting stages 'Hold' and 'Reduction' can be be selected to continue an interrupted drying process. The course of the drying process can be monitored in the operating level by reading the measured data of the associated heating circuit.

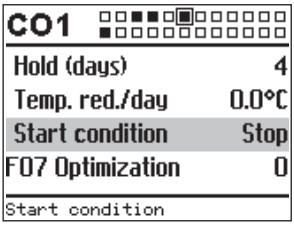

'Done' is displayed after the last phase is completed. This disappears from the display after resetting the display to Stop in CO1, 2 > F05 or after interrupting the power supply. Any power failure that occurs while the function is running automatically restarts the drying func-

tion. In systems in which the drying function is interrupted due to DHW heating (e.g. system Anl 2.1), storage tank charging does not occur while the drying function is active, provided it is not used for frost protection of the storage tank.

> ***NOTICE***
> *The function block parameter can only be accessed after starting the function by re-setting to 'Stop' in CO1, 2 > F05.*

Functions	WE	Configuration
Underfloor heating/drying of jointless floors	0	CO1, 2, 3 > F05 - 1
	25.0 °C	Start temperature: 20.0 to 60.0 °C
	5.0 °C	Rise/day: 1.0 to 10.0 °C
	45.0 °C	Maximum temperature: 25.0 to 60.0 °C
	4	Duration: 0 to 10 days
	0.0 °C	Reduction/day: 0.0 to 10.0 °C
	Stop	Start condition: Stop, Start, Hold, Reduction

6.4 Outdoor temperature for rated operation (day)

If a heating circuit is in night mode (automatic mode, ◴), this circuit is switched to day mode whenever the outdoor temperature falls below 'Outdoor temperature for continuous day mode'. Reduced operation restarts after the outdoor temperature rises above the limit (plus 0.5 °C hysteresis).

This function is activated at very low temperatures to avoid that the building cools down excessively outside the times-of-use when low outdoor temperatures occur.

Parameters	WE	Parameters: value range
Outdoor temperature for continuous day mode	−15.0 °C	PA1, 2, 3 > P09: −50.0 to 5.0 °C

6.5 Buffer tanks stems Anl 16.x

The systems Anl 16.x are fitted with a butter tank. The buffer tank can be charged by the district heating system according to an adjustable characteristic or to an adjustable fixed set point. The storage tank charging pump SLP is controlled to the storage tank set point (e.g. 45.3 °C), which is based on the outdoor temperature. Storage tank charging starts when temperature falls below the outdoor-temperature-based set point at SF1. The charging temperature results from the outdoor-temperature-based set point plus 6 °C (e.g. 51.3 °C). The storage tank charging is finished when the temperature at SF2 exceeds the outdoor-temperature-based set point by 3 °C (e.g. 48.3 °C).

With CO1 > F21 - 1, the 0 to 10 V output for speed control of the storage tank charging pump is available. All storage tank charging actions start with the minimum pump speed (function block parameter: 'Min. speed signal'). As soon as the charging temperature at VF1 is nearly reached, the speed of the storage tank charging pump is increased and the valve controls the flow rate. If the temperature at SF2 reaches the value entered in 'Start speed reduction', the signal level at the 0 to 10 V output is reduced within the range between the limits entered in 'Start speed reduction' and 'Stop speed reduction'. 0 V is issued when the storage tank charging pump is switched off.

For systems without a downstream control circuit, a transmitted external demand causes the feeder pump UP1 to be activated and can override the current buffer tank set point, if necessary. For systems with a downstream control circuit, either a transmitted external demand or the demand of the downstream control circuit causes the feeder pump UP1 to be activated, regardless of the CO5 > F14 setting. Regardless of the CO5 > F14 setting, the external demand and the demand of the downstream control circuit can override the current buffer tank set point.

The pump UP2 of the solid fuel boiler circuit starts to run when the temperature reaches 'Start temperature for boiler pump' at VF2. The boiler pumps is switched off again when the temperature at VF2 falls below the temperature T = 'Start temperature for boiler pump' – 'Boiler pump hysteresis'.

In systems Anl 16.3, 16.4 and 16.6, a solar circuit is integrated, which uses sensor SF2 for control. The collector circuit pump CP is activated when the temperature at the collector sensor RüF2 is higher than that at storage tank sensor SF2 by the value entered in 'Solar circuit pump ON'. It is deactivated when the temperature difference falls below the valve entered in 'Solar circuit pump OFF' or when the temperature at the storage tank sensor SF2 reaches 'Max. storage tank temperature'.

Note:
The buffer tank control circuit is deactivated as described in section 6.4. When predefined gradients of heating characteristic (CO1 > F11 - 0) are used, night mode is not possible in the buffer tank control circuit. In contrast to an active four-point characteristic (CO1 > F11 - 1): in this case, a four-point characteristic exists for day and night modes.

Functions	WE	Configuration
Speed reduction of charging pump based on charging progress	0	CO1 > F21 - 1
	40 °C	Start speed reduction: 5 to 90 °C
	50 °C	Stop speed reduction: 5 to 90 °C
	2 V	Min. speed signal: 0 to 10 V

Parameters	WE	Parameters: value range
Solar circuit pump ON	10.0 °C	PA4 > P10: 1.0 to 30.0 °C
Solar circuit pump OFF	3.0 °C	PA4 > P11: 0.0 to 30.0 °C
Max. storage tank temperature	80.0 °C	PA4 > P12: 20.0 to 90.0 °C
Start temperature for boiler pump	60.0 °C	PA5 > P01: 20.0 to 90.0 °C
Boiler pump hysteresis	5.0 °C	PA5 > P02: 0.0 to 30.0 °C

6.6 Summer mode

Summer mode is activated depending on the mean daytime temperature (measured between 7.00 h and 22.00 h) during the adjusted summer time period. If the mean daytime temperature exceeds the 'Boost' on the number of successive days set in 'No. days until activation', summer mode is activated on the following day. This means that the valves in all heating circuits are closed and the circulation pumps are switched off after t = 2 x valve transit time. If the mean daytime temperature falls below the 'Limit' on the number of successive days set in 'No. days until deactivation', summer mode is deactivated on the following day.

Functions	WE	Configuration
Summer mode	0	CO5 > F04 - 1
	01.06 - 30.09	Time: Adjustable as required
	2	No. days until activation: 1 to 3
	1	No. days until deactivation: 1 to 3
	18.0 °C	Limit: 0.0 to 30.0 °C

Note:
Summer mode only becomes effective when the controller is in automatic mode (🕘).

6.7 Delayed outdoor temperature adaptation

The calculated outdoor temperature is used to determine the flow temperature set point. The heat response is delayed when the outdoor temperature either increases or decreases or both. If the outdoor temperature varies by, for example 12 °C within a very short period of time, the calculated outdoor temperature is adapted to the actual outdoor temperature in small steps (delay time of 3 °C/h) over a time period of $t = \frac{12\,°C}{3\,°C/h} = 4\ h$.

Note:
The delayed outdoor temperature adaptation helps avoid unnecessary overloads of central heating stations in combination with either overheated buildings occurring, for example due to warm winds or temporarily insufficient heating due to the outdoor sensor being exposed to direct sunshine. In the operating level, the outdoor temperature blinks on the display while delayed outdoor temperature adaptation is active. A small hour glass appears next to the thermometer on the display when this function is active. The calculated outdoor temperature is displayed.

Functions	WE	Configuration
Delayed outdoor temperature adaptation (decreasing)	0	CO5 > F05 - 1 Delay/h: 1.0 to 6.0 °C
Delayed outdoor temperature adaptation (increasing)	0 3.0 °C	CO5 > F06 - 1 Delay/h: 1.0 to 6.0 °C

6.8 Remote operation

Apart from measuring the room temperature, the Type 5257-5 Room Panel (Pt 1000 sensor) provides the following opportunities of influencing the control process:

– Selection of the operating mode: ◴ Automatic mode
☼ Day mode
☾ Night mode
– Set point correction: during rated operation, the room temperature set point can be increased or reduced by up to 5 °C using a continuously adjustable rotary knob.

With an activated room sensor, the measured room temperature is displayed when the remote operation is connected and activated. Nevertheless, it is not used for control when either the **optimization**, **adaptation** or **flash adaptation** function is activated.

Type 5257-5	TROVIS 5578		
	RK1	RK2	RK3
Terminal 1	Terminal 5	Terminal 6	Terminal 7
Terminal 2	Terminal 18	Terminal 18	Terminal 18
Terminal 3	Terminal 15	Terminal 16	Terminal 17

Fig. 5: *Wiring plan for Type 5257-5 Room Panel to TROVIS 5573 for RK1, RK2* ***or*** *RK3*

Alternatively, TROVIS 5570 Room Panel can be connected over meter bus (–> section 8.14).

Functions	WE	Configuration
Room sensor	0	CO1, 2, 3 > F01 - 1
The following needs to be additionally configured if a TROVIS 5570 Room Panel is to be used:		
Device bus	0	CO7 > F01 - 1, device bus address
TROVIS 5570 Room Panel in RK1	0	CO7 > F03 - 1, device bus address
TROVIS 5570 Room Panel in RK2	0	CO7 > F04 - 1, device bus address
TROVIS 5570 Room Panel in RK3	0	CO7 > F05 - 1, device bus address

6.9 Optimization

This function requires the use of a room sensor. Depending on the building characteristics, the controller determines and adapts the required advance heating time (maximum 8 hours) to ensure that the desired 'Day set point' (rated room temperature) has been reached in the reference room when the time-of-use starts. During the advance heating period, the controller heats with the max. flow temperature. This temperature is built up in steps of 10 °C. As soon as the 'Day set point' has been reached, outdoor-temperature-compensated control is activated.

Depending on the room sensor, the controller switches off the heating system up to one hour before the time-of-use ends. The controller chooses the deactivation time such that the room temperature does not drop significantly below the desired value until the time-of-use ends.

During the advance heating period and the premature deactivation of the heating system, the ☼ or ☾ icon blink on the display.

Outside the times-of-use, the controller monitors the 'Night set point' (reduced room temperature). When the temperature falls below the night set point, the controller heats with the max. flow temperature until the measured room temperature exceeds the adjusted value by 1 °C.

Note:
– Direct sunshine can cause the room temperature to increase and thus result in the premature deactivation of the heating system.
– When the room temperature decreases while the heating system is shortly outside its times-of-use, this can prematurely cause the controller to heat up to the 'Day set point'.

Functions	WE	Configuration
Room sensor	0	CO1, 2, 3 > F01 - 1
Outdoor sensor		CO1, 2, 3 > F02 - 1
Optimization	0	CO1, 2, 3 > F07 - 1

Parameters	WE	Switch position: value range
Day set point	20.0 °C	☼: 0.0 to 40.0 °C
Night set point	15,0 °C	☾: 0.0 to 40.0 °C

6.10 Flash adaptation

To ensure that the controller reacts immediately to room temperature deviations during rated or reduced operation, the function block setting CO1, 2, 3 > F09 - 1 needs to be made. The heating is then always switched off as soon as the room temperature exceeds the 'Day set point' or 'Night set point' by 2 °C.

Heating first starts again when the room has cooled off and the room temperature is 1 °C above the set point. The flow temperature set point is corrected if the 'Cycle time' and 'KP (gain)' are set to a value other than 0. The 'Cycle time' determines the intervals at which the flow temperature set point is corrected by 1 °C. A 'KP (gain)' set to a value other than 0 causes a direct increase/decrease in flow temperature set point when a sudden deviation in room temperature arises. A 'KP (gain)' setting of 10.0 is recommended.

Note:
– Cooling loads, such as drafts or open windows, affect the control process.
– Rooms may be temporarily overheated after the cooling load has been eliminated.

Functions	WE	Configuration
Room sensor	0	CO1, 2, 3 > F01 - 1
Flash adaptation	0 20 min 0.0	CO1, 2, 3 > F09 - 1 Cycle time: 0 to 100 min KP (gain): 0.0 to 25.0
Parameters	**WE**	**Switch position: value range**
Day set point	20.0 °C	🌡☼: 0.0 to 40.0 °C
Night set point	15,0 °C	🌡☾: 0.0 to 40.0 °C

6.10.1 Flash adaptation without outdoor sensor (based on room temperature)

The flow temperature control starts with 'Day set point' for flow in rated operation or with 'Night set point' for flow in reduced operation as no set points calculated using characteristics exist without an outdoor sensor. The 'Cycle time' determines the intervals at which the flow temperature set point is corrected by 1 °C. The heating is then always switched off as soon as the room temperature exceeds the 'Day set point' or 'Night set point' by 2 °C. Heating first starts again when the room has cooled off and the room temperature is 1 °C above the set point. A KP (gain) set to a value other than 0 causes a direct increase/decrease in flow temperature set point when a sudden deviation in room temperature arises. A 'KP (gain)' setting of 10.0 is recommended.

Functions	WE	Configuration
Room sensor	0	CO1, 2, 3 > F01 - 1
Outdoor sensor		CO1, 2, 3 > F02 - 0
Flash adaptation	0 20 min 0.0	CO1, 2, 3 > F09 - 1 Cycle time: 1 to 100 min KP (gain): 0.0 to 25.0
Parameters	**WE**	**Switch position: value range**
Day set point	20.0 °C	🌡☼: 0.0 to 40.0 °C
Night set point	15,0 °C	🌡☾: 0.0 to 40.0 °C
Parameters	**WE**	**Parameters: value range**
Flow set point (day)	50.0 °C	PA1, 2, 3 > P03: 5.0 to 150.0 °C
Flow set point (night)	30.0 °C	PA1, 2, 3 > P04: 5.0 to 150.0 °C

6.11 Adaptation

The controller is capable of automatically adapting the heating characteristic to the building characteristics. provided a gradient characteristic has been set (CO1, 2, 3 > F11 - 0). The reference room, where the room sensor is located, represents the entire building and is monitored to ensure that the room set point ('Day set point') is maintained. When the mean measured room temperature in rated operation deviates from the adjusted set point, the heating characteristic is modified accordingly for the following time-of-use. The corrected value is displayed in PA1, 2, 3 > P01 (Gradient, flow).

Functions	WE	Configuration
Room sensor	0	CO1, 2, 3 > F01 - 1
Outdoor sensor		CO1, 2, 3 > F02 - 1
Adaptation	0	CO1, 2, 3 > F08 - 1
Four-point characteristic	0	CO1, 2, 3 > F11 - 0

Parameters	WE	Switch position: value range
Day set point	20.0 °C	☼: 0.0 to 40.0 °C
Night set point	15,0 °C	☾: 0.0 to 40.0 °C

Note:
If the **flash adaptation** *function is already configured with a small cycle time, the* **adaptation** *function should not be configured as well.*

6.12 Cooling control

Cooling control with outdoor sensor

When the cooling control function is activated in a control circuit with outdoor sensor, the four-point characteristic of the corresponding control circuit is automatically activated and the operating direction of the control output is reversed. In PA1, PA2 and/or PA3 the four points for the course of the set point based on the outdoor temperatures can be adjusted separately for day and night mode. The 'Base point for return flow temperature' that can be adjusted with an active return flow sensor determines the point at which a minimum limitation of the return flow temperature starts: if the measured return flow temperature falls below this value, the flow temperature set point is raised. The four return flow temperature values in the four-point characteristic function have no effect.

Functions		WE	Configuration
Outdoor sensor			CO1, 2, 3 > F02 - 1
Cooling control		0	CO1, 2, 3 > F04 - 1
Four-point characteristic		0	CO1, 2, 3 > F11 - 1
Parameters		**WE**	**Parameters: value range**
Outdoor temperature	Point 1	5.0 °C	PA1, 2, 3 > P05:–50.0 to 50.0 °C
	Point 2	15.0 °C	
	Point 3	25.0 °C	
	Point 4	35.0 °C	
Flow temperature	Point 1	20.0 °C	PA1, 2, 3 > P05: –5.0 to 150.0 °C
	Point 2	15.0 °C	
	Point 3	10.0 °C	
	Point 4	5.0 °C	
Reduced flow temperature	Point 1	30.0 °C	PA1, 2, 3 > P05: –5.0 to 150.0 °C
	Point 2	25.0 °C	
	Point 3	20.0 °C	
	Point 4	15.0 °C	

Cooling control without outdoor sensor

When the cooling control function is activated in a control circuit without outdoor sensor, only the adjustment limits for the day and night set points at the rotary switch as well as the 'Base point for return flow temperature' can be adjusted in PA1 and/or PA2.

Functions	WE	Configuration
Outdoor sensor		CO1, 2, 3 > F02 - 0
Cooling control	0	CO1, 2, 3 > F04 - 1
Parameters	**WE**	**Switch position: value range**
Flow set point (day)	20.0 °C	🌡☼: –5.0 to 150.0 °C
Flow set point (night)	30.0 °C	🌡☾: –5.0 to 150.0 °C
Parameters	**WE**	**Parameters: value range**
Min. flow temperature	20.0 °C	PA1, 2, 3 > P06: –5.0 to 150.0 °C
Max. flow temperature	90.0 °C	PA1, 2, 3 > P07: 5.0 to 150.0 °C
Base point for return flow temperature:	65.0 °C	PA1, 2, 3 > P13: 5.0 to 90.0 °C

Note:

*– The limiting factors KP of the **Return flow sensor** (CO1, 2, 3 -> F03) functions apply during cooling control as well.*

– The request for a signal by downstream control circuits or externally (when a pre-control circuit is used) is based on the maximum selection. Therefore, systems (e.g. system Anl 5.0) or controllers connected over a device bus are not suitable for transmitting the signal for required cooling. The 'Set point boost (pre-control circuit)' parameter can only generate higher and not lower set points in the pre-control circuit.

7 Functions of the DHW circuit

7.1 DHW heating in the storage tank system

Start storage tank charging

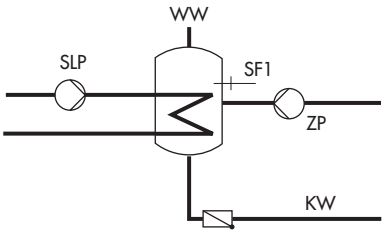

SLP	Storage tank charging pump
SF1	Storage tank sensor 1
ZP	Circulation pump (DHW)
WW	Hot water
KW	Cold water

Fig. 6: *Schematics of a storage tank system*

The controller begins charging the storage tank when the water temperature measured at storage tank sensor 1 falls below the 'DHW temperature set point' by 0.1 °C. If the flow temperature in the system exceeds the desired charging temperature, the controller tries to reduce the flow temperature in the heating circuit for up to three minutes before the storage tank charging pump is activated. When there is no heating operation or when the flow temperature in the system is lower, the storage tank charging pump is switched on immediately. If the function CO4 > F15 - 1 (**SLP ON depending on return flow temperature**) is activated,

the primary valve is opened without simultaneously operating the storage tank charging pump. The storage tank charging pump is first switched on when the primary return flow temperature has reached the temperature currently measured at storage tank sensor 1. This function enables storage tank charging when the heating system is switched off, e.g. in summer mode, without cooling down the storage tank first by filling it with cold flow water.The storage tank charging pump does not start operation before a sufficiently high temperature has been reached at the heat exchanger.

Note:
The 'DHW temperature set point' is to be regarded in relation to the charging temperature if a storage tank thermostat is used.

Time-controlled switchover of storage tank sensors

By configuring a second storage tank sensor 2, it is possible to determine by setting the function block CO4 > F19 - 1 that the storage tank sensor 1 is used for day mode in the DHW circuit and storage tank sensor 2 for night mode. As a result, different storage tank volumes can be kept at a constant temperature according to a time schedule and also at different temperatures if the 'DHW temperature set points' for day and night differ from one another.

Stop storage tank charging

The controller stops charging the storage tank when the water temperature measured at storage tank sensor 1 has reached the temperature T = 'DHW temperature' + 'Hysteresis'. When there is no heating operation or when the flow temperature demand in the system is lower, the corresponding valve is closed. The storage tank charging pump is switched off after t = 'Lag time of storage tank charging pump' x 'Valve transit time'.

With the default settings, the temperature in the storage tank is increased by 5 °C to reach 60 °C when the storage tank temperature falls below 55 °C. The charging temperature is calculated from the DHW temperature (55 °C) plus the 'Charging temperature boost' (10 °C), which equals 65 °C. When the storage tank has been charged, the heating valve is closed and the charging pump continues to run for the time t = P06 x Valve transit time. Outside the times-of-use, the storage tank is only charged when the temperature falls below 40 °C ('Night set point for DHW temperature'). In this case, the tank is charged with a charging temperature of 50 °C until 45 °C is reached in the tank.

Functions	WE	Configuration
Storage tank sensor 1		CO4 > F01 - 1
Storage tank sensor 2		CO4 > F02 (-1 with CO4 > F19 - 1)
SLP depending on return flow temperature	0	CO4 > F15
Switchover	0	CO4 > F19 (-1 only when CO4 > F02 - 1)

Parameters	WE	Switch position: value range
Day set point for DHW temperature or charging temperature when CO4 > F01 - 0	55.0 °C	☀: Min. to max. adjustable DHW set point
Night set point for DHW temperature	40.0 °C	☾: Min. to max. adjustable DHW set point

Parameters	WE	Parameters: value range
Min. adjustable DHW set point*	40.0 °C	PA4 > P01: 5.0 to 90.0 °C
Max. adjustable DHW set point*	60.0 °C	PA4 > P02: 5.0 to 90.0 °C

Parameters	WE	Parameters: value range
Hysteresis**	5.0 °C	PA4 > P03: 0.0 to 30.0 °C
Parameters	**WE**	**Parameters: value range**
Charging temperature boost***	10.0 °C	PA4 > P04: 1.0 to 50.0 °C
Lag time for storage tank charging pump	1.0	PA2 > P06 x Valve transit time: 0.0 to 10.0

* Parameters serve as limitation of the adjustment range for the DHW temperature to be set at the rotary switch

** Deactivation value T = 'DHW temperature' + 'Hysteresis'

*** Charging temperature T = 'DHW temperature' + 'Charging temperature boost'

7.1.1 DHW circuit additionally controlled by a globe valve

In systems Anl 7.1, 8.1, 9.1, 9.5, 11.1, 12.1, 13.1 and 21.1, the following versions with globe valve can be configured instead of the three-way valve control in the DHW circuit:

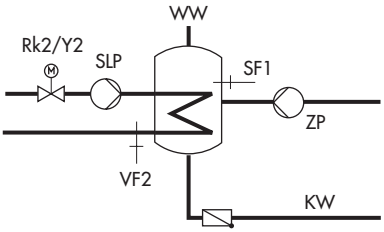

RK2/Y2	Control circuit/valve 2
SLP	Storage tank charging pump
SF1	Storage tank sensor 1
VF2	Flow sensor 2
ZP	Circulation pump (DHW)
WW	Hot water
KW	Cold water

Fig. 7: *Schematics of a storage tank system with a globe valve for return flow temperature limitation*

Globe valve and flow sensor VF2 are used exclusively for return flow temperature limitation in the schematics shown above. The pre-control circuit provides at least the same flow temperature as in the standard schematic version which is calculated from DHW temperature set point + Charging temperature boost + Boost set point of pre-control circuit.

The functions and parameters of the DHW heating in the storage tank system are upgraded by the following settings:

Functions	WE	Configuration
Return flow control	0	CO4 > F20 - 1
Parameters	**WE**	**Parameters: value range**
Max. return flow temperature	65.0 °C	PA4 > P07: 20.0 to 90.0 °C

7.2 DHW heating in the storage tank charging system

Start storage tank charging

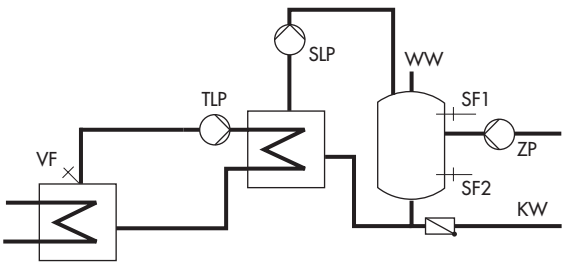

TLP	Heat exchanger charging pump
VF	Flow sensor
SLP	Storage tank charging pump
SF1	Storage tank sensor 1
SF2	Storage tank sensor 2
ZP	Circulation pump (DHW)
WW	Hot water
KW	Cold water

Fig. 8: *Schematics of a storage tank charging system*

The controller begins charging the storage tank when the water temperature measured at storage tank sensor 1 falls below the 'DHW temperature set point' by 0.1 °C. If the flow temperature in the system exceeds the desired charging temperature, the controller tries to reduce the flow temperature in the heating circuit for up to three minutes before the exchanger charging pump is activated together with the storage tank charging pump. When there is no heating operation or when the flow temperature in the system is lower, the exchanger charging pump is switched on immediately. If the temperature currently measured at storage tank sensor 1 is reached at the flow sensor VF or after three minutes at the latest, the storage tank charging pump is switched on. If a storage tank thermostat is used, the storage tank charging pump is switched on when the temperature T = Charging temperature – 5 °C is reached at the flow sensor VF.

Note:
The 'DHW temperature set point' is to be regarded in relation to the charging temperature if a storage tank thermostat is used.

When the flow sensor VF4 is activated, the set point in the heat exchanger circuit is influenced by the system deviation in the storage tank charging circuit upon activation of the storage tank charging pump: if the temperature measured at flow sensor VF4 is lower than the desired 'Charging temperature', the set point in the heat exchanger circuit is increased in steps of 1 °C. When the set point in the heat exchanger charging circuit reaches the 'Max.

charging temperature', the set point is no longer increased. An error message (Max. charging temp.) is generated.

Note:
The set point in the heat exchanger circuit which is valid at the end of the charging cycle will be used again at the beginning of the next cycle.

If times-of-use have been programmed for DHW heating, the 'DHW temperature set point' adjusted at the rotary switch is applied during these times-of-use. Outside the times-of-use, the night set point for DHW temperature is used. This does not apply when a storage tank thermostat is used.

Time-controlled switchover of storage tank sensors

By configuring a second storage tank sensor 2, it is possible to determine by setting the function block CO4 > F19 - 1 that the storage tank sensor 1 is used for day mode in the DHW circuit and storage tank sensor 2 for night mode. As a result, different storage tank volumes can be kept at a constant temperature according to a time schedule and also at different temperatures if the 'DHW temperature set points' for day and night differ from one another.

Stop storage tank charging

The controller stops charging the storage tank when the water temperature measured at storage tank sensor 2 has reached the temperature T = 'DHW temperature' + 'Hysteresis'. To do so, the heat exchanger charging pump is immediately switched off. When there is no heating operation or when the flow temperature demand in the system is lower, the corresponding valve is closed. The storage tank charging pump is switched off after the time has elapsed t = P06 x valve transit time.

Functions	WE	Configuration
Storage tank sensor 1		CO4 > F01 - 1
Storage tank sensor 2		CO4 > F02 - 1
Flow sensor	0	CO4 > F05
Switchover	0	CO4 > F19

Parameters	WE	Switch position: value range
Day set point for DHW temperature or charging temperature when CO4 > F01 - 0	55.0 °C	🌡☼: Min. to max. adjustable DHW set point
Night set point for DHW temperature	40.0 °C	🌡☾: Min. to max. adjustable DHW set point
Min. adjustable DHW set point*	40.0 °C	PA4 > P01: 5.0 to 90.0 °C

Parameters	WE	Switch position: value range
Max. adjustable DHW set point*	60.0 °C	PA4 > P02: 5.0 to 90.0 °C
Hysteresis**	5.0 °C	PA4 > P03: 1.0 to 30.0 °C
Charging temperature boost***	10.0 °C	PA4 > P04: 0.0 to 50.0 °C
Max. charging temperature	80.0 °C	PA4 > P05: 20.0 to 150.0 °C (only with VF4)
Lag time for storage tank charging pump	1.0	PA4 > P06: 0.0 to 10.0

* Parameters serve as limitation of the adjustment range for the DHW temperature to be set at the rotary switch

** Deactivation value T = 'DHW temperature' + 'Hysteresis'

*** Charging temperature T = 'DHW temperature' + 'Charging temperature boost'

7.3 DHW heating in instantaneous heating system

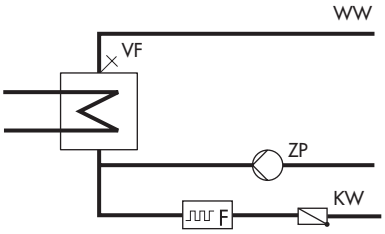

VF Flow sensor
ZP Circulation pump (DHW)
WW Hot water
KW Cold water
F Water flow sensor

Fig. 9: *Schematics of an instantaneous heating system*

Without flow rate sensor or flow switch, the control of the required DHW temperature at the flow sensor VF is only active during times-of-use of the circulation pump ZP. The flow rate sensor or flow switch allows the controller to recognize when DHW tapping starts and stops. Control of the required DHW temperature can made to be active only during DHW tapping by deleting all times-of-use of the circulation pump.

The control of the required DHW temperature at the flow sensor VF is only active during times-of-use of the circulation pump ZP.

Functions	WE	Configuration
Flow rate sensor	0 Analog	CO4 > F04 - 1 Selection: Analog (flow rate sensor), binary (flow switch)

Parameters	WE	Switch position: value range
Day set point for DHW temperature	55.0 °C	☀: Min. to max. adjustable DHW set point
Night set point for DHW temperature	40.0 °C	☾: Min. to max. adjustable DHW set point

Parameters	WE	Parameters: value range
Min. adjustable DHW set point	40.0 °C	PA4 > P01: 5.0 to 90.0 °C
Max. adjustable DHW set point	60.0 °C	PA4 > P02: 5.0 to 90.0 °C

7.4 Domestic hot water heating with solar system

The systems Anl 1.3, 1.4, 1.7, 1.8, 2.3, 2.4, 3.3, 3.4, 4.3, 10.3, 11.3 and 11.4 are fitted with a solar system for DHW heating. In these systems, the difference between the temperatures measured at storage sensor SF2 and the sensor at the solar collector VF3 is determined. The 'Solar circuit pump ON' parameter determines the minimum temperature difference between sensors VF3 and SF2 required to activate the solar circuit pump. If the temperature difference falls below the value of 'Solar circuit pump OFF', the solar circuit pump is switched off. Basically, the solar circuit pump is also switched off when either the water temperature measured at sensor SF2 has reached the 'Max. storage tank temperature' or when the solar collector temperature rises above 120 °C.

Note:
The times-of-use of the DHW circuit do not affect the operation of the solar system.

After the key number 1999 has been entered, the operating hours of the solar circuit pump are displayed in the extended operating level. See page 12.

Parameters	WE	Parameters: value range
Solar circuit pump ON	10.0 °C	PA4 > P10: 1.0 to 30.0 °C
Solar circuit pump OFF	3.0 °C	PA4 > P11: 0.0 to 30.0 °C
Max. storage tank temperature	80.0 °C	PA4 > P12: 20.0 to 90.0 °C

7.5 Intermediate heating

This function can only be activated in systems Anl 2.x, 4.1 to 4.5, 8.x, 9.5 and 9.6.

With the setting CO4 > F07 - 1, heating operation of the UP1 heating circuit is reactivated for a period of 10 minutes after 20 minutes of priority operation (heating deactivated during DHW heating). By setting CO4 > F07 - 0, storage tank charging is given unlimited priority over the heating operation in the UP1 heating circuit.

Functions	WE	Configuration
Intermediate heating	1	CO4 > F07 - 1

7.6 Parallel pump operation

This function can only be activated in systems Anl 2.x, 4.1 to 4.5, 8.x, 9.5 and 9.6.

When CO4 > F06 - 1, the circulation pump UP1 remains activated during DHW heating.

This does not include operating situations during which the current flow temperature demand of the pump circuit is lower than the adjusted 'Temperature limit'. In this case, the controller applies priority operation, if necessary with intermediate heating. Once a parallel pump operation cycle has been activated and the time period set in 'Stop' has elapsed, system deviations greater than 5 °C cause the controller to suspend parallel operation for 10 minutes and to apply priority operation.

Setting 'Stop' to 0 min leads to a parallel operation once initiated remaining regardless of a deviation.

Functions	WE	Configuration
Parallel pump operation	0 10 min 40.0 °C	CO4 > F06 - 1 Cancel: 0 to 10 min Temperature limit: 20.0 to 90.0 °C

7.7 Circulation pump during storage tank charging

With the setting CO4 > F11 - 1, the circulation pump (DHW) continues operation according to the programmed time schedule even during storage tank charging. With the setting CO4 > F11 - 0, the circulation pump is switched off as soon as the storage tank charging pump is activated. The circulation pump starts to operate again according to the time schedule when the storage tank charging pump has been switched off again.

Functions	WE	Configuration
Operation of circulation pump (DHW) during storage tank charging	0	CO4 > F11

7.8 Priority position

In many district heating systems with primary DHW heating, the allotted amount of water cannot meet DHW heating and heating operation demands when they are required at the same time. As a result, the capacity required for DHW heating needs to be taken from the heating system when great heating loads occur; and this, until DHW demand has been concluded. Nevertheless, heating operation is not to be interrupted simply. Only the amount of energy required for DHW heating is to be deducted. This can be achieved by using the priority functions: reverse control and set-back operation.

7.8.1 Reverse control

In all systems with DHW heating and at least one heating circuit with a control valve, DHW heating can be given priority by applying reverse control. With the setting CO4 > F08 - 1, the temperature is monitored at sensor VFx.

In systems without sensor VFx in the DHW circuit (e.g. Anl 4.5, 11.0, 12.0, 13.0 and 21.0), the temperature is monitored directly at storage tank sensor 1. If system deviations still occur after the time set in Start has elapsed, the set point of the heating circuit with the control valve is gradually reduced each minute until the flow temperature set point has reached 5 °C at the minimum. How strongly the controller responds is determined by the 'KP' (influence factor).

When 'Start' is set to 0, the priority operation is started regardless of the time and temperature in the system. The control valves of the corresponding heating circuits are closed.

Functions	WE	Configuration
Priority (reverse)	0 2 min 1.0	CO4 > F08 - 1 Start: 0 to 10 min KP (influencing factor): 0.1 to 10.0 Control circuit: HC1, HC2, HC3, HC1+HC2, HC1+HC3
Priority (set-back)	0	CO4 > F09 - 0

7.8.2 Set-back operation

In all systems with DHW heating and at least one heating circuit with a control valve, DHW heating can be given priority by applying set-back operation. With the setting CO4 > F09 - 1, the temperature is monitored at sensor VFx in the DHW circuit.

In systems without sensor VFx in the DHW circuit (e.g. Anl 4.5, 11.0, 12.0, 13.0 and 21.0), the temperature is monitored directly at storage tank sensor 1. If system deviations still occur after the time set in 'Start' has elapsed, the selected heating circuits with the control valve are set to reduced operation.

When 'Start' is set to 0, the priority operation is started in all heating circuits regardless of the time and temperature in the system.

Functions	WE	Configuration
Priority (reverse)	0	CO4 > F08 - 0
Priority (set-back)	0 2 min	CO4 > F09 - 1 Start: 0 to 10 min Control circuit: HC1, HC2, HC3, HC1+HC2, HC1+HC3

7.9 Forced charging of DHW storage tank

To provide the full network performance for room heating when the time-of-use of the heating circuits begins, any storage tanks are charged one hour before the time-of-use of the heating circuits starts. For the individual controller, this means that storage tank charging is activated when the water temperature in the storage tank falls below the adjusted deactivation value of T = 'DHW temperature' + 'Hysteresis'.

The forced charging of the storage tank does not take place when the DHW circuit is not used at the beginning of the time-of-use set for the heating circuit(s).

Note:
This function is not available when a storage tank thermostat is used.

7.10 Thermal disinfection of DHW storage tank

In all systems with DHW heating, a thermal disinfection is performed on a selected day of the week or daily.

– In systems with DHW storage tank, it is heated up, taking into account the Charging temperature boost parameter (or Set point boost, depending on the system) to the adjusted Disinfection temperature. Disinfection takes place within the adjusted time period ('Time').
– In systems with DHW heating in instantaneous heating system, the function remains active taking into account the Boost parameter until the circulation pipe, measured at storage tank sensor 1, has reached the adjusted Disinfection temperature, provided disinfection has not been terminated prematurely at the end of the adjusted time period (Time).

The 'Duration' determines how long the disinfection temperature must be maintained within the adjusted time period to rate the process successful. If the Duration is set to a value other than 0, no intermediate heating operation takes place during thermal disinfection.

When the 'Disinfection temperature' has not been reached before the end of the thermal disinfection cycle, it is indicated correspondingly on the display. This error message can also be generated prematurely if the remaining time until the disinfection temperature is reached is shorter than the adjusted 'Duration'. The indication is automatically reset when the disinfection temperature is properly reached during the following thermal disinfection cycle.

Thermal disinfection for preventing legionella infection causes:

– Excessively high return flow temperatures during the disinfection cycle (return flow temperature limitation suspended)
– Excessively high DHW temperatures after thermal disinfection has been concluded
– Possibly lime scale, which can have a negative effect on heat exchanger performance.

Note:
This function is not available when a storage tank thermostat is used.
The return flow temperature limitation in the primary control circuit is deactivated also while thermal disinfection is active in a secondary controller in controllers linked with each other over a device bus.

Functions	WE	Configuration
Storage tank sensor 1	1	CO4 > F01 - 1

Functions	WE	Configuration
Thermal disinfection	0	CO4 > F14 - 1
	Wednesday	Monday, Tuesday, ..., daily
	00:00 - 04:00	Time: Adjustable as required in steps of 15 minutes
	70.0 °C	Disinfection temperature: 60.0 to 90.0 °C
	10.0 °C	Boost: 0 to 50 °C
	0 min	Duration: 0 to 255 min
	ON	Active when BI = ON, OFF (start of disinfection with BI17)**

* Systems Anl 1.9, 11.0, 11.9, 12.0, 12.9, 13.0, 13.9, 21.0 and 21.9 only

** Setting only accessible with time setting 00:00 - 00:00 h

8 System-wide functions

8.1 Automatic summer/standard time switchover

The time is automatically changed on the last Sunday in March at 2.00 h and on the last Sunday in October at 3.00 h.

Functions	WE	Configuration
Summer time	1	CO5 > F08 - 1

Note:
The automatic summer/standard time switchover can also be programmed in the Time/date menu. See section 2.4.

8.2 Frost protection

Frost protection measures are taken when the outdoor temperature falls below 'Limit'. The switching differential to cancel the frost protection measures is always 1 °C.

Restricted frost protection: frost protection measures are taken only when all heating circuits in the system are in stand-by mode. The circulation pumps are automatically switched on and their flow temperature set points are adjusted to 10 °C. The circulation pump in the DHW circuit is automatically switched on only when the stand-by mode has been adjusted at the rotary switch in all heating circuits. Nevertheless, the storage tank is always recharged to 10 °C if the storage tank temperature falls below 5 °C.

Frost protection with highest priority: the heating circuit circulation pumps are always switched on automatically. The flow temperature set points of all heating circuits currently in stand-by mode are set to +10 °C. In the DHW circuit, the circulation pump is always activated. If the storage tank temperature falls below +5 °C, the storage tank is recharged to +10 °C.

Functions	WE	Configuration
Frost protection	3.0 °C	CO5 > F09 - 0: Restricted frost protection CO5 > F09 - 1: Frost protection with highest priority Limit: –15.0 to 3.0 °C

NOTICE

Frost protection operation of a pump, a heating circuit or the DHW circuit is only active when the ❄ frost protection icon is displayed. In the stand-by mode (⏻) fixed set point control without outdoor temperature sensor does not include frost protection.

8.3 Forced pump operation

When the heating circuit pumps have not been activated for 24 hours, forced operation of the pumps is started between 12.02 h and 12.03 h. This is done to avoid that the pumps get stuck when they are not operated for long periods of time. In the DHW circuit, the circulation pump is operated between 12.04 h and 12.05 h, the other pumps between 12.05 h and 12.06 h.

8.4 Return flow temperature limitation

The temperature difference between the flow and return flow in a network indicates how well the energy is used: the greater the difference, the higher the efficiency. A return flow sensor is sufficient to evaluate the temperature difference when the flow temperatures are predefined. The return flow temperature can be limited either to a value depending on the outdoor temperature (variable) or to a fixed set point. When the return flow temperature measured at return flow sensor exceeds the limit, the flow temperature set point is reduced. When the temperature measured at return flow sensor RüF exceeds 'KP (limiting factor)', the set point of the flow temperature (flow temperature of the heating system, charging temperature) is reduced. This causes the primary flow rate to be reduced and the return flow temperature to drop. In systems Anl 2.x, 3.1 to 3.4, 4.1 to 4.4, 5.1, 5.2, 7.x, 8.x and 9.x, the 'Max. return flow temperature' parameter (PA4 level) is used for limitation in the primary circuit during DHW heating if it is greater than the parameter valid for the primary circuit.The KP

(limiting factor) determines how strongly the controller responds when the limits are exceeded in either direction (PI algorithm).

If just the proportional component is to be implemented, set CO5 > F16 - 1. This allows the integral-action component in the return flow temperature limitation algorithm of all control circuits of the controller to be deactivated. The set point reading (flow temperature of the heating, charging temperature) blinks to indicate that a return flow limitation is active in the control circuit concerned.

Note:
When outdoor-temperature-compensated control with gradient characteristic is used, the return flow temperature is limited to a fixed value by equating the 'Base point for return flow temperature' and 'Max. return flow temperature' (PA1, 2, 3 > P13 and P14) parameters.

Functions	WE	Configuration
Return flow sensor RüF1/2/3	1.0	CO1, 2, 3, 4 > F03 - 1 KP (limiting factor): 0.1 to 10.0
Return flow temperature limitation with P algorithm*	0	CO5 > F16

* If the controller indicates CO5 > F00 - 1, any access to the return flow, flow rate and capacity settings is locked.

Parameters	WE	Parameters: value range
Return flow gradient	1.2	PA1, 2, 3 > P11: 0.2 to 3.2
Return flow level	0.0 °C	PA1, 2, 3 > P12: –30.0 to 30.0 °C
Base point for return flow temperature:	65.0 °C	PA1, 2, 3 > P13: 5.0 to 90.0 °C
Max. return flow temperature	65.0 °C	PA1, 2, 3 > P14: 5.0 to 90.0 °C
Max. return flow temperature	65.0 °C	PA4 > P07: 20.0 to 90.0 °C

or

Parameters	WE	Parameters: value range
Return flow temperature, points 1 to 4	65.0 °C	PA1, 2, 3 > P05: 5.0 to 90.0 °C

NOTICE
To ensure that the preset return flow temperature limit can be met, make sure that the heating characteristic is not adjusted to ascend too steeply, the speed of the circulation pumps is not set too high and the heating systems have been balanced.

8.5 Condensate accumulation control

Activate the **damping** function to start up condensate accumulation plants, in particular to avoid problematic excess temperatures. The controller response to set point deviations which cause the primary valve to open is attenuated. The controller response to set point deviations which cause the control valve to close remains unaffected.

Note:
The condensate accumulation control function can only be activated when the control circuit concerned is controlled using a PI algorithm (three-step control).

Functions	WE	Configuration
Control mode	1	CO1, 2, 3, 4 > F12 - 1
Damping	0 3.0 °C	CO1, 2, 3, 4 > F13 - 1 Max. system deviation: 3.0 to 10.0 °C

8.6 Three-step control

The flow temperature can be controlled using a PI algorithm. The valve reacts to pulses that the controller sends when a system deviation occurs. The length of the first pulse, in particular, depends on the extent of the system deviation and the selected 'KP (gain)' (the pulse length increases as KP increases). The pulse and pause lengths change continuously until the system deviation has been eliminated. The pause length between the single pulses is greatly influenced by the 'Tn (reset time)' (the pause length increases as TN increases). The 'TY (valve transit time)' specifies the time required by the valve to travel through the range of 0 to 100 %.

Functions	WE	Configuration
Control mode	1	CO1, 2, 3, 4 > F12 - 1
	2.0 120 s 0 s 45 s	KP (gain): 0.1 to 50.0 Tn (reset time): 1 to 999 s TV (derivative-action time): **Do not change this value!** TY (valve transit time): 15, 20, 25, … , 240 s

8.7 On/off control

The flow temperature can be controlled, for example by activating and deactivating a boiler. The controller switches on the boiler when the flow temperature falls below the set point by T = 0.5 x 'Hysteresis'. When the set point is exceeded by T = 0.5 x 'Hysteresis', the boiler is switched off again. The greater the value you choose for 'Hysteresis', the less frequent switching on and off will be. By setting the 'Minimum ON time', an activated boiler remains switched on during this period regardless of the flow temperature fluctuations. Similarly, a deactivated boiler will remain switched off regardless of the flow temperature fluctuations if the 'Min. OFF time' has been specified.

Functions	WE	Configuration
Control mode	1	CO1, 2, 3, 4 > F12 - 0
	5.0 °C	Hysteresis: 1.0 to 30.0 °C
	2 min	Min. ON time: 0 to 10 min
	2 min	Min. OFF time: 0 to 10 min

8.8 Continuous control in control circuit RK1

The flow temperature in the control circuit RK1 can be controlled using a PID algorithm. The valve in RK1 control circuit receives an analog 0 to 10 V signal from the controller. When a system deviation occurs, 'KP (gain)' immediately causes the 0 to 10 V signal to change (the greater the KP, the greater the change). The integral component becomes effective with time: 'Tn (reset time)' represents the time which elapses until the integral component has changed the output signal to the same extent as the immediate change performed by the proportional component (the greater Tn is, the slower the rate of change will be). Due to the derivative component, any change of the system deviation is incorporated into the output signal with a certain gain (the greater TV is, the stronger the change will be).

Functions	WE	Configuration
Control mode	1	CO1 > F12 - 1
	2.0	KP (gain): 0.1 to 50.0
	120 s	Tn (reset time): 1 to 999 s
	0 s	TV (derivative-action time): 0 to 999 s
	45 s	TY (valve transit time): 15, 20, 25, …, 240 s

8.9 Releasing a control circuit/controller with binary input

The release of an individual control circuit or the controller with the binary input only becomes effective when the respective control circuit is in automatic mode (🕘 icon). The released control circuit always works in automatic mode; the deactivated control circuit behaves as if it were transferred to stand-by mode. It remains active, however, in any case for processing an external demand. The control circuit can be released by the binary input when the binary input is either a make contact ('Active when BI' = OFF) or a break contact ('Active when BI' = ON).

Note:

– *In systems with downstream heating circuit without a valve (Anl 2.x, 4.x), BI1 only influences the operation of this heating circuit when **'Release control circuit'** is configured, while the operation of the entire controller (except for processing of external demand) is influenced when **'Release controller'** is configured.*

– *In system Anl 3.0, BI1 influences the operation of the entire controller (except for processing an external demand) when **'Release control circuit'** is configured.*

– *In buffer tank systems Anl 15.x and 16.x, BI1 influences only the operation of the buffer tank charging circuit when **'Release control circuit'** is configured.*

Functions	WE	Configuration
Enable	0	CO1, 2, 3 > F14 - 1*
Release controller	0	CO5 > F15 - 1*
	ON	* Active when BI = ON, OFF

8.10 Speed control of charging pump

This function controls the speed of the storage tank charging pump in buffer tank systems (Anl 16.x) and in DHW circuits. An active speed control of the charging pump (CO4 > F21 - 1) causes the storage tank sensor SF2 to be activated, however, in combination with CO4 > F02 - 0 only to measure the speed control. In buffer tank systems, CO1 > F21 - 0 only activates the function.

All storage tank charging actions start with the minimum pump speed (function block parameter: 'Min. speed signal'). As soon as the charging temperature is nearly reached, the speed of the storage tank charging pump is increased and the valve controls the flow rate. If the temperature at SF2 reaches the value entered in 'Start speed reduction', the signal level at the 0 to 10 V output is reduced within the range between the limits entered in 'Start speed reduction' and 'Stop speed reduction' (10 V to 'Min. speed signal' corresponds with 'Start

speed reduction' to 'Stop speed reduction'). 0 V is issued when the storage tank charging pump is switched off.

Functions	WE	Configuration
SLP speed control or speed reduction of the charging pump based on charging progress	0 40.0 °C 50.0 °C 2 V	CO1 > F21 - 1 or CO4 > F21 - 1 Start speed reduction: 5.0 to 90.0 °C Stop speed reduction: 5.0 to 90.0 °C) Min. speed signal: 0 to 10 V

8.11 Processing an external demand in control circuit RK1

The controller can process binary or analog requests for an externally required signal by a more complex secondary system. A binary requests can only be processed when the input SF3 or FG3 is not assigned. Processing of external demand over device bus can also be configured.

> ***NOTICE***
> *Overheating may occur in the heating circuits of the primary controller without control valve.*

Excessive charging temperatures in DHW circuits without control valve controlled by the primary controller are excluded when the default settings of the controller are used: while storage tank charging is active, no flow temperature higher than the charging temperature is used by the primary controller. Nevertheless, if the **Priority for external demand** function is activated, the external demand is also processed during storage tank charging.

Functions	WE	Configuration
Priority for external demand	0	CO4 > F16 - 1

Binary demand processing

Regardless of the operating mode set for control circuit RK1, except for manual mode, the controller regulates the flow temperature when either the binary input (terminals 17/18) is a make contact ('Active when BI' = OFF) or a break contact ('Active when BI' = ON) in control circuit RK1 to at least the adjusted flow temperature adjusted in PA1 > P10 (Minimum flow temperature set point HC for binary demand processing).

Functions	WE	Configuration
Demand processing	0	CO1 > F15 - 1
Demand processing, 0 to 10 V	0	CO1 > F16 - 0

Functions	WE	Configuration
Binary demand processing	0 ON	CO1 > F17 - 1 Active when BI = ON, OFF

Parameters	WE	Parameters: value range
Minimum flow temperature set point HC for binary demand processing	40.0 °C	PA1 > P10: 5.0 to 150.0 °C

Demand processing, 0 to 10 V

Regardless of the operating mode set for RK1 control circuit (except for manual mode), the controller regulates the flow temperature at least to the temperature corresponding with the 0 to 10 V signal at the 0 to 10 V input.

Functions	WE	Configuration
Demand processing	0	CO1 > F15 - 1
Demand processing, 0 to 10 V	0 0 °C 20 °C	CO1 > F16 - 1 Lower transmission range: 0 to 150 °C Upper transmission range: 0 to 150 °C
Binary demand processing	0	CO1 > F17 - 0

Parameters	WE	Parameters: value range
Set point boost (pre-control circuit)	5.0 °C	PA1 > P15: 0.0 to 50.0 °C

8.12 Capacity limitation in RK1

The capacity can be limited based on a pulse signal 3 to 800 pulse/h at terminals 17/18. This only applies to systems which do not use input SF3/FG3. Three different operating situations exist:

– A system with simultaneous room and DHW heating requires maximum energy.
– A system with a fully charged storage tank that is only used for room heating requires less energy.
– A system that suspends room heating during DHW heating requires less energy.

As a result, three different maximum limit values can be adjusted:

– Max. limit value to determine the absolute upper limit
– Max. limit value for heating to operate room heating only
– Max. limit value for DHW to operate DHW heating only

In all systems without DHW heating or without heating circuit, only the Max. limit value for the capacity can be specified. If the 'Max. limit' or 'Max. limit for heating' parameter is set to AT, a four-point characteristic configured in CO1 > F11 - 1 allows the input of four capacity limits for outdoor-temperature-compensated capacity limitation in addition to the outdoor, flow and return flow temperature values.

All limits are adjusted as pulses per hour [pulses/h]. As the reading for the current pulse rate P [pulse/h] (–> extended operating level, key number 1999) is calculated based on the time interval between incoming pulses, the controller naturally cannot react immediately to every sudden capacity change in the system.
The flow set point of the control circuit RK1 is reduced when the pulse rate reaches the currently valid maximum limit. The Limiting factor determines how strongly the controller responds.

Example to determine the limit:

If a capacity of 30 kW is to be limited, the following limit must be set in a heat meter, which issues one pulse per kilowatt hour:

$$P = \frac{30\ \text{kW}}{1\ \text{kWh/pulse}} = 30\ \text{pulse/h}$$

Note:
If the controller indicates CO5 > F00 - 1, any access to the return flow, flow rate and capacity settings is locked.

Functions	WE	Configuration
Capacity limitation in RK1	0	CO5 > F10 - 1
	15 pulse/h	Max. limit: AT to 800 pulse/h
	15 pulse/h	Max. limit for heating*: AT to 800 pulse/h
	15 pulse/h	Max. limit for DHW*: 3 to 800 pulse/h
	1.0	Limiting factor: 0.1 to 10.0
Capacity limitation in RK1 with meter bus	0	CO6 > F12 - 0

* Not in systems Anl 1.0, 1.5-1.9, 3.0, 3.5, 4.0, 7.x, 10.x, 11.x, 12.x, 13.x, 14.x, 15.x, 16.x, 21.x and 25.x

8.13 Creep feed rate limitation with a binary input

It is possible to report to the controller when the creep feed rate has fallen below a certain level by using a limit switch of the primary valve connected at the input BI13 or to RüF1. Either the open ('Active when BI =' Off) or closed binary input BI13 ('Active when BI =' ON) can be configured to indicate that the creep feed rate has fallen below a certain level. Only the closed binary input at RüF1 can be processed. Shortly after the alert, the controller closes the valve RK1. As soon as the flow temperature falls below the set point by more than 5 °C after the valve has been closed, control operation is started again.

Functions	WE	Configuration
Creep feed rate limitation	0 Binary ON	CO5 > F12 - 1 Switching mode: Binary (terminals 04/12), analog (RüF1) Active when BI =: ON, OFF

8.14 Device bus

The device bus allows the connection of up to 32 participants (Series 55xx Controllers). Terminals 29/30 is used in the TROVIS 5578 Controller for this purpose. No attention must be paid to the polarity of the device bus wiring.

Activate the device bus and specify the device bus address for each device. Note that the device bus address 1 is to be set for just one controller in the system and that all device bus addresses must be unique. The controller with device bus address 1 implements the required bus bias voltage for the system. Once the controllers have been connected and set accordingly, additional functions can be configured. These partly application-specific functions include:

- Requesting and processing an external demand (see page 144)
- Sending and receiving outdoor temperatures (see page 145)
- Synchronizing the clock (see page 146)
- Priority over all controllers (see page 146)
- Connecting a TROVIS 5570 Room Panel (see page 147)
- Display error messages issued by the device bus (see page 147)

8.14.1 Requesting and processing an external demand

In general, the controller which controls the primary valve or boiler (= primary controller) in a system of linked controllers will process the demand of all subsequent controllers (= secondary controllers). As a result, the primary controller must be configured to receive this demand. Usually, the secondary controllers are configured such that they send their maximum flow set point to the primary controller.
In special cases, however, it might happen that only the set point of one control circuit is to be sent. The appropriate function blocks to do so are also available for selection. After the selected function blocks have been activated, you must specify a register number. The following applies: in a system of linked controllers which are hydraulically supplied by a primary controller, all controllers (primary and secondary controllers) must have the same register number setting for the 'Demand register'.
A controller which is configured to receive a demand in register no. 5 will not process a demand sent to register no. 6. The primary controller compares the received requested demands and its own requested demand and supplies the system with the required flow temperature (if necessary, increased by the 'Set point boost (pre-control circuit)'.

Note:
Overheating may occur in the heating circuits of the primary controller without control valve.

Primary controller:

Functions	WE	Configuration
Device bus	0	CO7 > F01 - 1, device bus address
Receive external demand in RK1	0	CO7 > F15 - 1*
Receive external demand in RK2	0	CO7 > F17 - 1*
Receive external demand in RK3	0	CO7 > F18 - 1*
	5	* Register number/5 to 64

Parameters	WE	Parameters: value range
Set point boost (pre-control circuit)	5.0 °C	PA1 > P15: 0.0 to 50.0 °C

Secondary controller:

Functions	WE	Configuration
Device bus	0	CO7 > F01 - 1, device bus address
Send demand in RK1	0	CO7 > F10 - 1*

Send demand in RK2	0	CO7 > F11 - 1*
Send demand in RK3	0	CO7 > F12 - 1*
Send demand DHW	0	CO7 > F13 - 1*
Send max. demand	0	CO7 > F14 - 1*
	5	* Register number/5 to 64

Note:
The register number specifies the location where the flow set points are saved in the primary controller. As a result, the register number set in the secondary controller in CO7 > F10 to F14 must be the same as the register number set in CO7 > F15 in the primary controller.

Excessive charging temperatures in DHW circuits without control valve controlled by the primary controller are excluded when the default settings of the controller are used: while storage tank charging is active, no flow temperature higher than the charging temperature is used by the primary controller. Nevertheless, if the **Priority for external demand** function is activated, the external demand is also processed during storage tank charging.

Functions	WE	Configuration
Priority for external demand	0	CO4 > F16 - 1

8.14.2 Sending and receiving outdoor temperatures

Controllers equipped with one (two) outdoor sensor(s) can be configured to supply other controllers with the measured outdoor temperature(s) over the device bus. This enables outdoor-temperature-compensated control even in systems which do not have their own outdoor sensor.

Functions	WE	Configuration
Device bus	0	CO7 > F01 - 1, device bus address
Send AF1	0	CO7 > F06 - 1*
Receive AF1	0	CO7 > F07 - 1*
Send AF2	0	CO7 > F08 - 1**
Receive AF2	0	CO7 > F09 - 1**
	1	* Register number/1 to 4
	2	** Register number/1 to 4

Note:
The register number for the outdoor temperature AF1 or AF2 must be the same for the sending and the receiving controller.

8.14.3 Synchronizing the clock

One controller in a system of linked controllers should perform the 'Clock synchronization' function. This controller sends its system time once every 24 hours to all other controllers over the device bus.
Regardless of this function, the system time of all controllers is adapted immediately when the time setting of one controller is changed.

Functions	WE	Configuration
Device bus	0	CO7 > F01 - 1, device bus address
Clock synchronization	0	CO7 > F02 - 1

8.14.4 Priority over all controllers

When controllers are linked with each other over a device bus, the heating circuits of other controllers can be shut down while DHW heating is active. It is also possible to configure the return flow temperature limitation in the primary circuit so that it is raised to the value adjusted for the maximum return flow temperature (or for point 1 of the return flow temperature in a four-point characteristic). Controllers configured to trigger this function must generate the 'DHW heating active' message. 'Receive release HC_' must be configured for the heating circuits concerned in the controllers whose heating circuit(s) are to be shut down when this DHW heating is active. The same register number must be specified if only one DHW circuit is to affect one or more heating circuits.If several DHW circuits exist in the system, it is possible to select the heating circuits that are only to react to one or other active DHW heating by assigning different register numbers. If a secondary heating circuit with valve is to be shut down, the valve of this circuit is closed while its circulation pump remains activated.
If a secondary heating circuit without valve is to shut down, just its circulation pump and not the primary circuit (RK1) is shut down, for example in systems Anl 2.x by configuring 'Receive release HC1'.

Functions	WE	Configuration
Device bus	0	CO7 > F01 - 1, device bus address
Send 'DHW heating active'	0	CO7 > F20 - 1*

Functions	WE	Configuration
Receive release HC1	0	CO7 > F21 - 1*
Receive release HC2	0	CO7 > F22 - 1*
Receive release HC3	0	CO7 > F23 - 1*
	32	* Register number/5 to 64

8.14.5 Connecting a TROVIS 5570 Room Panel

A TROVIS 5570 Room Panel (accessories) can be connected to the TROVIS 5578 Controller to measure the room temperature and for remote operation of a heating circuit. The room panel enables direct access to the operating mode and controller time settings as well as to all relevant parameters of a heating circuit. Additionally, the room temperature, outdoor temperature and, if applicable, other data points can be retrieved and displayed.

Functions	WE	Configuration
Device bus	0	CO7 > F01 - 1, device bus address
Room panel RK1	0	CO7 > F03 - 1*
Room panel RK2	0	CO7 > F04 - 1*
Room panel RK3	0	CO7 > F05 - 1*
	32	* Register number/1 to 32

8.14.6 Display error messages issued by the device bus

The setting CO7 > F16 - 1 causes the controller to react to the error messages from the device bus by generating the 'External err' error message as long as the faults of the other device bus participants exist.

Regardless of the CO7 > F16 setting, error messages received over device bus basically lead to the control station (GLT) being dialed when the modem function is active. You can define which error messages are to be passed on over the device bus after entering the key number 0025. The default setting of 465 causes the controller to pass on just the messages highlighted (bold) in the table in section 9.4 over the device bus, except for 'External err'.

Functions	WE	Configuration
Receive errors	0	CO7 > F16 - 1

8.15 Requesting a demand by issuing a 0 to 10 V signal

The controller can request a demand for the maximum flow set point (with boost, if need be) by issuing an analog 0 to 10 V signal for external demand. For this purpose, the 0 to 10 V output is used as an alternative to issuing the control signal.

Analog, binary signals or requests processed over the device bus can be integrated into the analog request for an external demand.

Functions	WE	Configuration
External demand	0	CO1 > F18 - 1
	0.0 °C	Lower transmission range: 0.0 to 150.0 °C
	120.0 °C	Upper transmission range: 0.0 to 150.0 °C
	0.0 °C	Boost: 0.0 to 30.0 °C

8.16 Connecting potentiometers for valve position input

The FG1 to FG3 inputs can be used to connect potentiometers, for example to input valve positions when a resistance room sensor is not configured in the control circuit concerned. The use of TROVIS 5570 Room Panel is possible. The measured values (in the measuring ranges from 0 to 2000 Ω) do not appear on the controller display. They are only available as Modbus data points.

Functions	WE	Configuration
Room sensor RF1, 2, 3		CO1, 2, 3 > F01 - 0
		Exceptions:
		CO1 >F01 - 1 and CO7 >F03 - 1
		CO2 >F01 - 1 and CO7 >F04 - 1
	0	CO3 >F01 - 1 and CO7 >F05 - 1

8.17 Locking manual level

To protect the heating system, this function can be used to lock the manual level. When this function has been activated, automatic mode is started when the rotary switch is set to in automatic mode.

Functions	WE	Configuration
Lock manual level	0	CO5 > F21 - 1

8.18 Locking the rotary switch

When this function has been activated, the controller remains in automatic mode regardless of the rotary switch position. The rotary switch can no longer be used to adjust the controller settings. It is still possible to enter the key number.

Functions	WE	Configuration
Lock rotary switch	0	CO5 > F22 - 1

8.19 Feeder pump operation

In system Anl 3.0, 5.0, 7.x and 12.x, the feeder pump UP1 only starts to operate in the default setting when a flow temperature demand of a secondary controller exists. If CO5 > F14 - 1 is configured, this is also the case when the controller's own secondary circuit requires heat.

Functions	WE	Configuration
Operation UP1	0	CO5 > F14 - 1

8.20 External demand for heat due to insufficient heat supply

An external heat source can be demanded using the 0 to 10 V output. The function block for a request for external demand CO1 > F18 - 1 is automatically set. The function block parameters allow the transmission range to be determined. When a system deviation in RK1 greater than 10 °C lasts longer than 30 minutes, a voltage signal corresponding to the actual demand is issued. At the same time, the RK1 valve is forced to close. After 30 minutes, the external demand for heat is canceled (0 V issued) and the control signal output in RK1 is enabled again.

Functions	WE	Configuration
Demand for external heat	0	CO1 > F20 - 1

8.21 Entering customized key number

To prevent the function and parameter settings being changed by unauthorized users, a customized key number can be added to the fixed service key number. You can set the customized key number to be between 0100 and 1900.

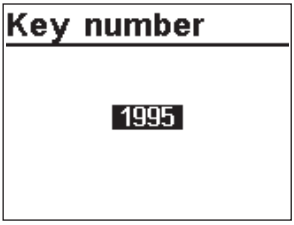

Turn the rotary switch to ⚙ (settings).

- ↻ Enter key number 1995.
- ✳ Confirm key number.
- ↻ Enter valid key number.
- ✳ Confirm key number.

- ↻ Enter customized key number.
- ✳ Confirm customized key number.
  This number is the new key number.

Turn the rotary switch back to 🖵 (operating level).

9 Operational faults

A malfunction is indicated by the blinking ⚠ icon on the display. Press the rotary pushbutton to open the error level. As long as an error message is present, the error level is displayed, also when it has not been opened by pressing the rotary pushbutton.

In the error level, the error message is displayed as specified in the following list (section 9.1).

Note:
After the system code number has been changed or after restarting the controller, any error messages are suppressed for approx. three minutes.

9.1 Error list

Sensor failure = Sensor failure (see section 9.2)

Disinfection = Disinfection temperature not reached (see section 7.10)

Max. charging temp. = Max. charging temperature reached (see section 7.2)

External = Error message from device bus (see section 8.14.6)

Temp. monitoring = Temperature monitor alarm (see section 9.3)

Unauthorized access Unauthorized access occurred (see section 9.4)

Binary alarm = Error message of a binary input

Meter bus = Meter bus communication error

Heat meter = Heat meter error registered

Note:
If the error messages or indications that can be confirmed are included in the list shown, you can decide whether you want to confirm these error messages on exiting the error list.

9.2 Sensor failure

As described in the error list, sensor failures are indicated by displaying 'Sensor failure' error message in the error level. For detailed information, exit the error level and view the different temperature values in the information level: each sensor icon displayed together with three dashes instead of the measured value indicates a defective sensor. The following list explains how the controller responds to the failure of the different sensors.

- **Outdoor sensor AF1:** When the outdoor sensor fails, the controller uses a flow temperature set point of 50 °C or the 'Max. flow temperature' when the max. flow temperature (PA1, 2, 3 > P07) is lower than 50 °C.
- **Flow sensor(s) in heating circuit(s):** When the flow sensors in the heating circuits are defective, the associated valve moves to 30 % travel. DHW heating using such a sensor to measure the charging temperature is suspended.
- **Flow sensors in the DHW circuit with control valve:** When the flow sensor VF4 fails, the controller behaves as if VF4 has not been configured. As soon as the control of the charging temperature becomes impossible (VF2 defective), the associated valve is closed.
- **Return flow sensors RüF1/2/3:** When the return flow sensor fails, the controller continues operation without return flow temperature limitation.
- **Room sensors RF1/2/3:** When the room sensor fails, the controller uses the settings for operation without room sensor. The controller, for example switches from optimizing mode to reduced operation. The adaptation mode is canceled. The last determined heating characteristic remains unchanged.
- **Storage tank sensors SF1/2:** When one of the two sensors fails, the storage tank is no longer charged (exception: solar system).
- **Solar circuit sensors SF3, VF3:** When one of the two sensors fails, the storage tank in the solar circuit is no longer charged.

9.3 Temperature monitoring

When a system deviation greater than 10 °C persists in a control circuit for 30 minutes, the 'Temp. monitoring' message is generated.

Functions	WE	Configuration
Monitoring	0	CO5 > F19 - 1

9.4 Error status register

The error status register is used to indicate controller or system errors. In modem operation when the controller **dials the building control system** (GLT) both when an error is detected and when it has been corrected (CO6 > F06 - 1), each change in the status of the error status register causes the controller to dial the control system. The error messages which cause a change in the state of the configured fault alarm output (with CO5 > F07 - 1) are highlighted in the following table (bold).

The function blocks in the CO8 configuration level allow single controller inputs that are not used to be added to the error status register as binary inputs. Either an open or closed binary input can be configured to indicate an error. The controller indicates 'Binary alarm' when at least one of the inputs configured in this way registers an error.

Note:
If free inputs are to issue binary signals to a building control station without affecting the error status register, activate the corresponding function block in the CO8 configuration level and select '- - -' as the function block parameter.

Error message	Decimal value	
Sensor failure	1	1
–	2	
Disinfection	4	
Max. charging temp.	8	
External	16	16
Temp. monitoring	32	
Unauthorized access	64	64
Binary alarm	128	128
Meter bus	256	256
Heat meter	512	
		Total
Example: Value of error status register when a sensor fails and a temperature monitoring alarm =		465

9.5 Alarm notification by text message

Notification by text message (SMS) using a multi-function modem DataMod 11 connected to the controller requires an analog telephone connection and an access number to a TAP service provider as DataMod 11 only uses the TAP protocol to send a text message. As soon as a fault has been registered in the error status register, the text message indicating a controller fault is sent. On the mobile phone, the following error message is displayed:

[Date] [Time]
[Phone number of the controller]
Controller malfunction
TROVIS 5578 # [Controller ID of defective controller]

The time stamp [Date], [Time] is added by the text messaging center, not by the controller. If an error message is transmitted to a controller equipped with DataMod 11, the controller ID of the defective controller is sent, instead the controller ID of the "modem controller". A detailed error message is not available.

Note:
The controller ID is indicated in the extended operating level under Info 2 as the serial number (see page 12).

When Modbus is activated and, at the same time, the dial-up in case of error is released, the connection with the building control station is established first and then the text message is sent. If the first attempt to connect to the building control station fails, the controller tries again until the programmed number of redialing attempts has been exhausted.

The access and mobile phone number must be entered as follows: 49 xxx yyyyyy, where xxx stands for 160, 171 or any other valid dialing code and yyyyyy represents the specific mobile phone number.

Functions	WE	Configuration
Text message	0	CO6 > F08 - 1
Modem	0	CO6 > F03 - 1
Automatic configuration	0	CO6 > F04 - 1

Parameters*	WE	Parameters: value range
Modem dialing pause (P)	5 min	PA6 > P04: 0 to 255 min
Modem timeout (T)	5 min	PA6 > P05: 1 to 255 min
Number of redialing attempts (C)	15	PA6 > P06: 1 to 255
Access number	–	PA6 > P08: Max. 22 characters; 1, 2, 3, …, 9, 0; - for end of a string; P for pause
Mobile phone number	–	PA6 > P09: Max. 22 characters; 1, 2, 3, …, 9, 0; - for end of a string; P for pause

* –> Section (Description of communication parameter settings)

10 Communication

Using the optional communication module, the TROVIS 5578 Heating Controller can communicate with a control system. In combination with a suitable software for process visualization and communication, a complete control system can be implemented. The following communication versions are possible:

– **Operation with a dial-up or GSM modem using the RS-232 to modem communication module:** basically, communication is only established automatically when errors occur in the system. The controller works autonomously. Nevertheless, the modem can dial up to the controller at any time to read data from it or otherwise influence it, if necessary. The controller works autonomously. Nevertheless, the controller can be dialed up over the modem at any time to read data from it or influence it, if necessary.

– **Operation at a two-wire bus using the RS-485 communication module**

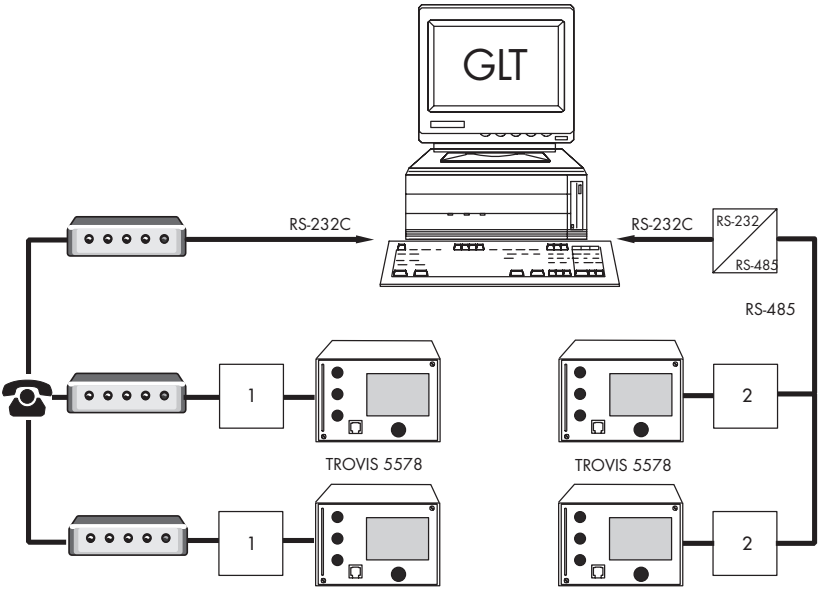

1 Optional RS-232 to modem communication module

2 Optional RS-485 communication module

Fig. 10: *Network structure*

Note:
The operating software can be updated over modem or data cable, provided Modbus has been activated (CO6 > F01 - 1).

10.1 RS-232 to modem communication module

When looking onto the controller front, the connection for the optional communication module is located on the left side of the controller housing (RJ-45 connector socket). A dial-up or GSM modem can be connected to the controller over the RS-232 to modem communication module (8812-2004). A dial-up modem is required if the controller is to be connected to the telecommunications network. In this case, the controller works autonomously and can initiate a call to the building control station when errors occur. Additionally, the building control sta-

tion can dial up to the controller, read data from it and send new data once the valid key number has been written to holding register no. 40145.

Note:
If a wrong key number has been written to holding register no. 40145 for the third consecutive time, the controller immediately interrupts the modem connection and generates an 'Unauthorized access' message. As a result, the call to the configured control system is triggered and a text message is sent. Bit D6 is deleted as soon as the error status register has been read by the control system and the connection has been terminated.

In special cases, the l**ock dial-up function** can be selected to stop dial-up in case an error occurs. Using the **dial-up upon corrected error** function, the controller additionally informs the building control station when a previously signaled error no longer persists.

The **automatic modem configuration** function causes the dial-up modem connected to the controller to be configured automatically by the controller.

Functions	WE	Configuration
Modbus	1	CO6 > F01 - 1
16-bit address	0	CO6 > F02
Modem	0	CO6 > F03 - 1
Automatic configuration	0	CO6 > F04 - 1
Lock dial-up to building automation system	0	CO6 > F05
Dial-up also upon corrected error	0	CO6 > F06
Monitoring	0	CO6 > F07 - 0

Parameters*	WE	Parameters: value range
Modbus station address (8 bit)	255	PA6 > P01: 1 to 247 With CO6 > F02 - 1: 1 to 32000
Modem dialing pause (P)	5 min	PA6 > P04: 0 to 255 min
Modem timeout (T)	5 min	PA6 > P05: 1 to 255 min
Number of redialing attempts (C)	15	PA6 > P06: 1 to 255
Phone number of control station (TEL-nr)	–	PA6 > P08: Max. 22 characters; 1, 2, 3, …, 9, 0; - for end of a string; P for pause

* –> Section 10.3 (Description of communication parameter settings)

10.2 RS-485 communication module

When looking onto the controller front, the connection for the optional communication module is located on the left side of the controller housing (RJ-45 connector socket). A permanent bus connection (data cable) is required to operate the controller in combination with the RS-485 communication module (8812-2002). The bus line links the control units/devices in an open ring. At the end of the bus line, the data cable is connected to the control station using an RS-485/RS-232 converter (e.g. CoRe01, refer to Data Sheet T 5409).

The maximum range of the bus connection (cable length) is 1200 meters. A maximum of 126 devices can be connected to such a segment. For greater distances or when more than 126 devices are to be connected to a line, repeaters (e.g. CoRe01) must be used to regenerate the signal level. A maximum of 246 devices with 8-bit addressing can be connected to a bus. If no communication is established between the control system and controller, the time of access by the control system can be restricted to dynamic process by the **monitoring** function. The controller resets the monitoring function, provided the valid Modbus requests are registered. However, in case of an error, all level bits are initialized back to "autonomous" after 30 minutes have elapsed.

NOTICE

Upon installation, observe the relevant standards and regulations governing lightning and overvoltage protection.

Functions	**WE**	**Configuration**
Modbus	1	CO6 > F01 - 1
16-bit address	0	CO6 > F02
Modem	0	CO6 > F03 - 0
Monitoring	0	CO6 > F07
Parameters*	**WE**	**Parameters: value range**
Modbus station address (8 bit)	255	PA6 > P01: 1 to 247 With CO6 > F02 - 1: 1 to 32000

* –> Section 10.3 (Description of communication parameter settings)

10.3 Description of communication parameter settings

Modbus station address (8 bit)

This address is used to identify the controller in bus or modem mode. In a system, each controller needs to be assigned a unique address.

Modem dialing pause (P)

We recommend to keep dialing pause for approx. 3 to 5 minutes between dialing up to the control system/the text messaging center to avoid a permanent overloading of the telecommunications network. The Modem dialing pause defines the interval between two dialing attempts.

Modem timeout (T)

When the controller connects to the control station (GLT) but without addressing a Modbus data point, the connection is terminated after the time specified for 'Modem timeout' has elapsed. If the error status register has not been read during the GLT connection, the controller dials up the GLT again after the Modem dialing pause (P) has elapsed.
When sending a text message, the specified time is without meaning.

Number of redialing attempts (C)

The controller tries to dial up to the control system again, observing the Modem dialing pause, in case the GLT/text messaging center is busy or the function that triggered the call has not been reset by the controller. After the specified number of redialing attempts have failed, OFF is indicated in the controller's extended operating level. The dialing attempt counter is automatically reset at 12:00 h and the controller tries to connect again.
Resetting of triggered call = Reading the error status register (HR40150)

Phone number of control station

Enter the phone number of the control system modem including the dialing code, if necessary. Short pauses between the numbers can be entered using P (= 1 second); the end of the string is to be marked by '–'. The phone number may include a maximum of 22 characters.

Example: 069, 2 sec. pause, 4009, 1 sec. pause, 0:
0 6 9 P P 4 0 0 9 P 0 – (= 11 characters)

Note:
The connected modem is automatically configured when the function block CO6 > F04 - 1 is activated.

10.4 Meter bus

The TROVIS 5578 Controller is fitted with an M-Bus interface for max. three M-Bus units. For systems with three control circuits, a flow rate and/or capacity limitation can be be configured in every control circuit based on the measured data of the heat meters WMZ1 to WMZ3.

Note:
Details on the use of the different heat or water meters can be found in the technical documentation TV-SK 6311.

10.4.1 Activating the meter bus

To successfully transfer data from the heat meter, the heat meter must use a standardized protocol in accordance with EN 1434-3. It is not possible to make a general statement about which specific data can be accessed in each meter. For details on the different meter makes refer to the technical documentation TV-SK 6311. All necessary function block parameters to set up the communication with heat meters are available in CO6 > F10. The meter bus address, model code and reading mode must be specified for the heat meters WMZ1 to WMZ3. A meter bus address must be unique and correspond with the address set in the WMZ. If the preset meter bus address is unknown, a single heat meter connected to the controller can be assigned the meter bus address 254. The address 255 deactivates the communication with the respective WMZ.The model code to be set for the heat meter can be found in TV-SK 6311. In general, the default setting of 1434 can be used for most devices. The meters can be read either automatically every 24 hours (approx.), continuously or when the coils (= Modbus data points) assigned to the heat meters WMZ1 to WMZ3 are overwritten with the value 1 over the system bus interface. In extended operating level (see note on page 12), the respective measuring and limit values are displayed after confirming the plant scheme when the flow rate and/or capacity limitation is configured.

Note:
After restarting components (controller or gateway) by connecting them to the power supply, it may take up to two minutes before the controller allows access to CO6 > F10.

Functions	WE	Configuration
Meter bus	0	CO6 > F10 - 1
	255	WMZ1...3 address: 0 to 255
	1434	WMZ1...3 model code: 1434, CAL3, APAtO, SLS
	24h	WMZ1...3 reading mode: 24h, CONT, CoiL

10.4.2 Flow rate and/or capacity limitation with meter bus

The refreshing rate of the measured variable (flow rate and/or capacity) must be less than fives seconds to ensure that the limitation can be performed properly. The technical documentation TV-SK 6311 lists the heat meters which comply with this criterion and, therefore can be used for limitation. Note that some makes, particularly battery-operated heat meters, respond with communication pauses when they are read too frequently. Others might run out of energy early. For details refer to the above mentioned TV-SK document.

– A system with simultaneous room and DHW heating requires maximum energy.
– A system with a fully charged storage tank that is only used for room heating requires less energy.
– A system that suspends room heating during DHW heating requires less energy.

As a result, three different maximum limit values for RK1 can be adjusted in all systems with only one control valve and DHW heating on the secondary side:

– Max. limit value to determine the absolute upper limit
– Max. limit value for heating to operate room heating only
– Max. limit value for DHW to operate DHW heating only

If the 'Max. limit' or 'Max. limit for heating' parameter for HC1 is set to AT, a four-point characteristic configured in CO1 > F11 - 1 allows the input of four flow rate or capacity limits for outdoor-temperature-compensated flow rate or capacity limitation in addition to the outdoor, flow and return flow temperature values.

In all systems without DHW heating or without heating circuit, only the max. limit value for the flow rate or capacity can be specified. In all systems with two or three control valves, separate maximum limits can be adjusted for the flow rate and capacity.

Flow limitation

All necessary function block parameters to set up the flow rate limitation are available in CO6 > F11 or CO6 > F13 and CO6 > F15 for the second and third control circuit. One after the other, the system's max. limit or max. limit for heating and the max. limit for DHW for systems with only one primary control valve and secondary DHW heating have to be set. The

'Limiting factor' determines how strongly the controller responds when the limit values are exceeded in either direction.

> ***NOTICE***
> *If the controller indicates CO5 > F00 - 1, any access to the return flow, flow rate and capacity settings is locked.*

Functions	WE	Configuration
Meter bus	0	CO6 > F10 - 1
	255	WMZ1...3 address: 0 to 255
	1434	WMZ1...3 model code: 1434, CAL3, APAtO, SLS
	24h	WMZ1...3 reading mode: 24h, CONT, CoiL
Flow rate limitation in RK1	0	CO6 > F11 - 1
	1.5 m³/h	Max. limit: AT to 650 m³/h
	1.5 m³/h	Max. limit for heating: AT to 650 m³/h
	1.5 m³/h	Max. limit for DHW: 0.01 to 650 m³/h
	1.0	Limiting factor: 0.1 to 10.0
Flow rate limitation in RK2	0	CO6 > F13 - 1
	1.5	Max. limit: 0.01 to 650 m³/h
	1.0	Limiting factor: 0.1 to 10.0
Flow rate limitation in RK3	0	CO6 > F15 - 1
	1.5	Max. limit: 0.01 to 650 m³/h
	1.0	Limiting factor: 0.1 to 10.0

Capacity limitation

All necessary function block parameters to set up the capacity limitation are available in CO6 > F12 or CO6 > F14 and CO6 > F16 for the second and third control circuit. One after the other, the system's max. limit or max. limit for heating and the max. limit for DHW for systems with only one primary control valve and secondary DHW heating have to be set. The 'Limiting factor' determines how strongly the controller responds when the limit values are exceeded in either direction.

> ***NOTICE***
> *If the controller indicates CO5 > F00 - 1, any access to the return flow, flow rate and capacity settings is locked.*

Functions	WE	Configuration
Meter bus	0	CO6 > F10 - 1
	255	WMZ1...3 address: 0 to 255
	1434	WMZ1...3 model code: 1434, CAL3, APAtO, SLS
	24h	WMZ1...3 reading mode: 24h, CONT, CoiL
Capacity limitation in RK1	0	CO6 > F12 - 1
	1.5 kW	Max. limit: AT to 6500 kW
	1.5 kW	Max. limit for heating: AT to 6500 kW
	1.5 kW	Max. limit for DHW: 0.1 to 6500 kW
	1.0	Limiting factor: 0.1 to 10.0
Capacity limitation in RK2	0	CO6 > F14 - 1
	1.5 kW	Max. limit: 0.01 to 6500 kW
	1.0	Limiting factor: 0.1 to 10.0
Capacity limitation in RK3	0	CO6 > F16 - 1
	1.5 kW	Max. limit: 0.01 to 6500 kW
	1.0	Limiting factor: 0.1 to 10.0

10.5 Memory module

The use of a memory module (order no. 1400-9379) is particularly useful to transfer all data from one TROVIS 5578 Controller to several other TROVIS 5578 Controllers.

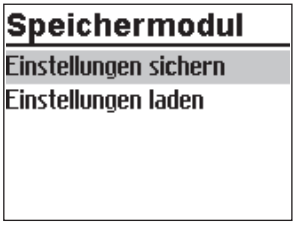

The memory module is plugged into the RJ-45 connector socket located at the side of the controller. Once the module has been connected, 'Save settings' appears on the controller display. If the memory module already contains data from a different TROVIS 5578 Controller, turn the rotary pushbutton until 'Load settings' is displayed.

– Pressing the rotary pushbutton to confirm 'Save settings' causes the controller settings to be transferred to the memory module.
– Pressing the rotary pushbutton to confirm 'Load settings' causes the controller settings to be transferred from the memory module.

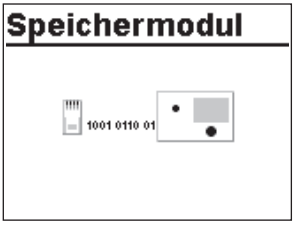

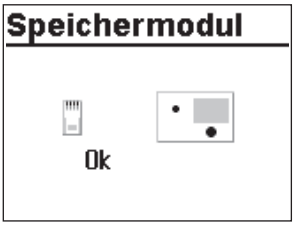

During data transfer, the zeros and ones run across the display. When the transfer was successful, 'OK' is displayed. After that, the connection between controller and memory module can be terminated.

Using TROVIS-VIEW (order no. 6661-1014), it is possible to configure all controller settings on a convenient user interface at the computer and to document these settings.

10.6 Data logging

A data logging module (order no. 1400-9378) saves the following controller data every two minutes:

- Temperatures measured by the sensors
- Control signals [%]
- Switching states of the pump outputs
- Error status register and its archive
- Access to the controller settings

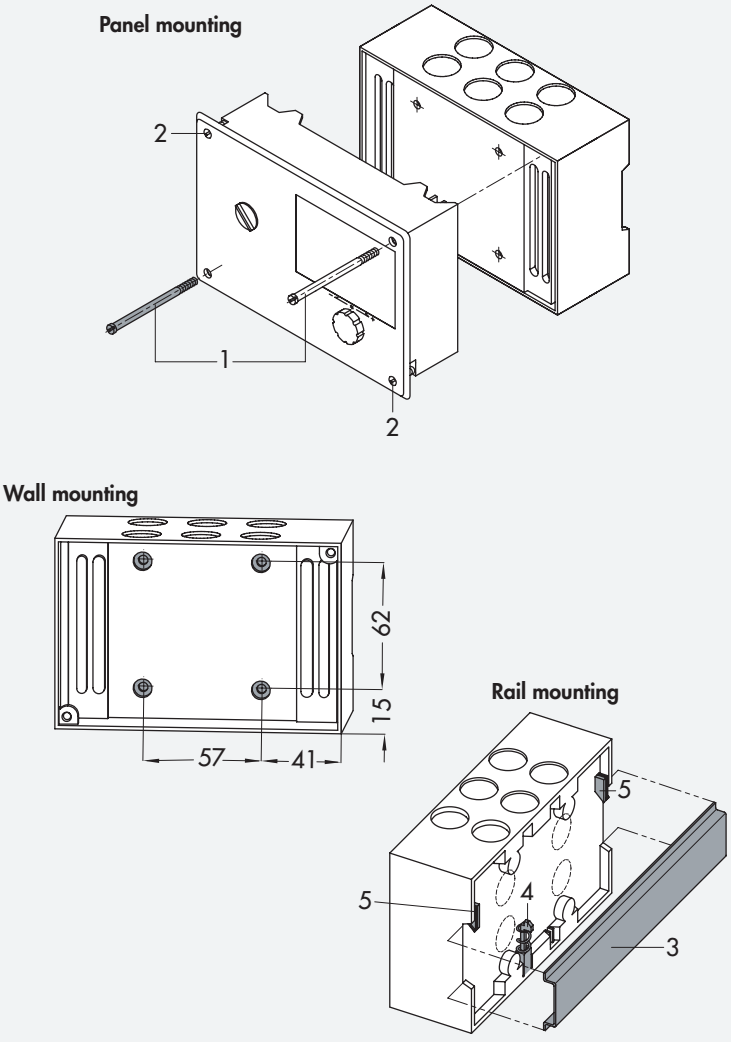

Fig. 11: *Installation*

The data logging module is plugged into the RJ-45 connector socket located at the side of the controller. Once the module has been connected, 'Start data logging' and 'Copy logging data' appear on the controller display.

– Pressing the rotary pushbutton to confirm 'Start data logging' causes the controller settings to be transferred to the data logging module. The controller display returns to the reading indicated when the data logging module was connected.

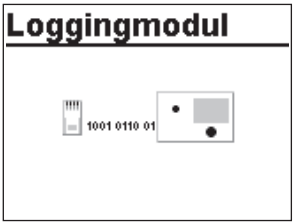

– Pressing the rotary pushbutton to confirm 'Copy logging data' causes already logged data to be transferred from the memory controller to the data logging module. During data transfer, the zeros and ones run across the display. When the transfer was successful, 'OK' is displayed. After that, the connection between controller and data logging module can be terminated.

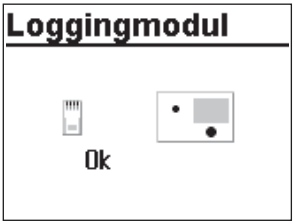

Note:

– *The controller starts to write over the oldest data as soon the memory of the data logging module is full after approximately eight days. The current memory capacity of the data logging module can be read in the extended operating level under 'Logging memory' as the second value in the sequence (range of values: 0 to 6035). Directly after inserting the data logging module, data can be first read after the first scanning cycle has been performed.*

– *The internal memory of the controller is full after approx. 14 days. After that, the controller starts to write over the oldest data.*

The data log viewer software allows the data to be viewed in graph format. The USB converter 3 (order no. 1400-9377) is required to connect the data logging module to a computer. The data log viewer software is supplied together with the USB converter 3.

11 Installation

Dimensions in mm (W x H x D): 144 x 98 x 75

The controller consists of the housing with the electronics and the back panel with the terminals. It is suitable for panel, wall and top hat rail mounting (see Fig. 11).

Panel mounting

1. Undo the two screws (1).
2. Pull apart the controller housing and the base.
3. Make panel cut-out with the dimensions 138 x 92 mm (W x H).
4. Push the controller housing through the panel cut-out.
5. Tighten the two screws (2) to clamp the controller housing against the control panel.
6. Perform electric wiring on the base as described in section 12.
7. Remount the controller housing.
8. Fasten the two screws (1).

Wall mounting

1. Undo the two screws (1).
2. Pull apart the controller housing and the base.

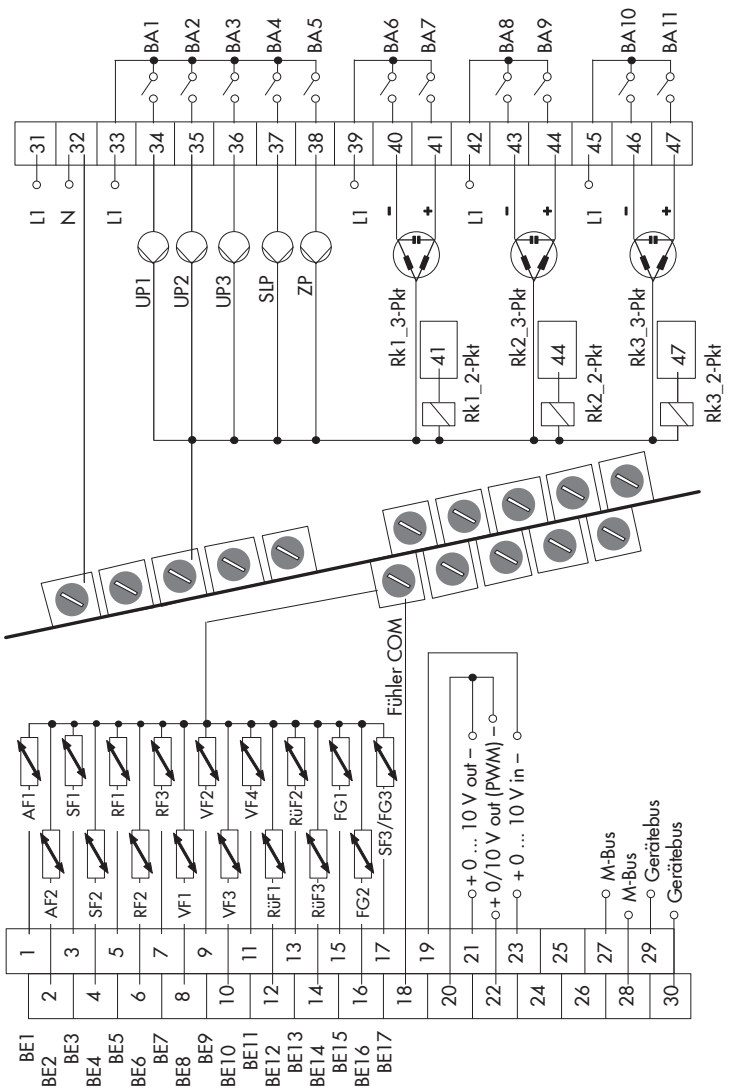

Fig. 12: *Connection of the TROVIS 5578 Controller*

3. If necessary, drill holes with the specified dimensions in the appropriate places. Fasten the back panel with four screws.
4. Perform electric wiring on the base as described in section 12.
5. Remount the controller housing.
6. Fasten the two screws (1).

Rail mounting

1. Fasten the spring-loaded hook (4) at the bottom of the top hat rail (3).
2. Slightly push the controller upwards and pull the upper hook (5) over the top hat rail. Undo the two screws (1).
3. Pull apart the controller housing and the base.
4. Perform electric wiring on the base as described in section 12.
5. Remount the controller housing.
6. Fasten the two screws (1).

12 Electrical connection

DANGER!
Risk of electric shock!

– *For electrical installation, you are required to observe the relevant electrotechnical regulations of the country of use as well as the regulations of the local power suppliers. Make sure all electrical connections are installed by trained and experienced personnel.*
– *Before performing any work on the controller, disconnect it from the power supply.*
– *The terminals 33, 39, 42 and 45 allow safety equipment which have a direct influence on individual electric acutators and pumps to be integrated. If this is not the case, connect a jumper from terminal 31 to terminals 33, 39, 42 and 45. Do not connect ELV wiring (according to VDE 0100) to these terminals.*

Notes on electric wiring

– Install the 230 V power supply lines and the signal lines separately! To increase immunity, keep a minimum distance of 10 cm between the lines. Make sure the minimum distance is also kept when the lines are installed in a cabinet.

- The lines for digital signals (bus lines) and analog signals (sensor lines, analog outputs) must also be installed separately!
- In plants with a high electromagnetic noise level, we recommend using shielded cables for the analog signal lines. Ground the shield at one side, either at the control cabinet inlet or outlet, using the largest possible cross-section. Connect the central grounding point and the PE grounding conductor with a 10 mm² cable using the shortest route.
- Inductances in the control cabinet, e.g. contactor coils, are to be equipped with suitable interference suppressors (RC elements).
- Control cabinet elements with high field strength, e.g. transformers or frequency converters, must be shielded with separators providing a good ground connection.

Overvoltage protection

- If signal lines are installed outside buildings or over large distances, make sure appropriate surge or overvoltage protection measures are taken. Such measures are indispensable for bus lines.
- The shield of signal lines installed outside buildings must have current conducting capacity and must be grounded on both sides.
- Surge diverters must be installed at the control cabinet inlet.

Connecting the controller

Wall mounting

To connect the wiring, pull the controller out of its base. To connect the feeding cables, break through the holes in the marked locations at the top or bottom at the base housing and fit supplied grommets or suitable cable glands. Ensure that the cables are not subject to torsion or bending by taking suitable precautions before inserting the cable.

The controller is connected as illustrated in the following wiring diagrams.

Open the housing to connect the cables. To connect the feeding cables, make holes in the marked locations at the top, bottom or back of the base of the housing and fit suitable grommets or cable glands.

Connecting sensors

Cables with a minimum cross-section of 2 x 0.5 mm² can be connected to the terminals at the base of the housing.

Connection of flow rate sensor (order no. 1400-9246)

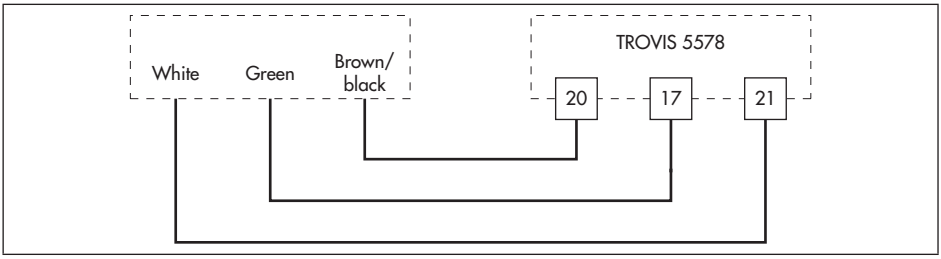

Connecting actuators

– 0 to 10 V control output: Use cables with a minimum cross-section of 2 x 0.5 mm².
– Three-step or on/off outputs: Connect cables with at least 1.5 mm² suitable for damp locations to the terminals of the controller output. The direction of travel needs to be checked at start-up.

Connecting pumps

Connect all cables with at least 1.5 mm² to the terminals of the controller as illustrated in the wiring diagram.

Legend for Fig. 12

AF	Outdoor sensor	RüF	Return flow sensor	SLP	Storage tank charging pump
BA	Binary output	SF	Storage tank sensor	ZP	Circulation pump (DHW)
BE	Binary input	VF	Flow sensor		
FG	Potentiometer	RK	Control circuit		
RF	Room sensor	UP	Circulation pump (heating)		

13 Appendix

13.1 Function block lists

CO1: RK1 · Heating circuit 1 (not system Anl 1.9)*

F	Function	WE	Anl	Comments Function block parameters: value range (default setting)
01	Room sensor	0	Not Anl 1.5–1.8, 3.x, 5.x, 7.x, 9.x, 12.x, 14.x, 15.x, 16.x	CO1 > F01 - 1: Room sensor RF1, temperature reading and FG1 input for Type 5257-5 Room Panel active
02	Outdoor sensor	0	1.5–1.8, 7.x, 10.5, 25.5	CO1 > F02 - 1: Outdoor sensor AF1, outdoor-temperature-compensated control active
		1	1.0–1.3, 2.x, 3.0–3.4, 4.x–9.x, 10.0–10.3, 11.x–16.x, 21.x, 25.0	
03	Return flow sensor	0	1.1–1.4, 10.1–10.3, 21.1	CO1 > F03 - 1: Return flow sensor RüF1, limitation function active **Function block parameters:** KP (limiting factor): 0.1 to 10.0 (1.0)
		1	1.0, 1.5, 1.6–1.8, 2.x–9.x, 10.0, 10.5, 11.x– 16.x, 21.0, 21.2, 21.9, 25.x	
04	Cooling control	0	All*	CO1 > F04 - 1: Cooling control, only with CO1 > F11 - 1 The cooling control function causes a reversal of the operating direction and a minimum limitation of the return flow temperature in RK1.

F	Function	WE	Anl	Comments Function block parameters: value range (default setting)
05	Underfloor heating	0	Not Anl 1.5–1.8, 3.x, 5.x, 7.x, 9.x, 12.x, 14.x, 15.x, 16.x	CO1 > F05 - 1: Underfloor heating/drying of jointless floors **Function block parameters:** Start temperature: 20.0 to 60.0 °C (25 °C) Temp. rise/day: 0.0 to 10.0 °C (5.0 °C) Maximum temperature: 25.0 to 60.0 °C (45.0 °C) Duration: 0 to 10 days (4 days) Temp. reduction/day: 0.0 to 10.0 °C (0.0 °C) Start condition: Stop, Start, Hold, Reduction
07	Optimization	0	Not Anl 1.5–1.8, 3.x, 5.x, 7.x, 9.x, 12.x, 14.x, 15.x, 16.x	CO1 > F07 - 1: Optimization of heating times (only with CO1 > F01 - 1 and CO1 > F02 - 1)
08	Adaptation	0		CO1 > F08 - 1: Heating characteristic adaptation (only with CO1 > F01 - 1, CO1 > F02 - 1 and CO1 > F11 - 0)
09	Flash adaptation	0		CO1 > F09 - 1: Flash adaptation of flow temperature (only with CO1 > F01 - 1) **Function block parameters:** Cycle time: 0 or 1 to 100 min (20 min) KP (gain): 0.0 to 25.0 (0.0)
11	Four-point characteristic	0	Not Anl 1.5–1.8, 7.x	CO1 > F11 - 1: Four-point characteristic (only with CO1 > F08 - 0) CO1 > F11 - 0: Gradient characteristic
12	Control mode (three-step)	1	All*	CO1 > F12 - 1: Three-step control **Function block parameters:** KP (gain): 0.1 to 50.0 (2.0) Tn (reset time): 1 to 999 s (120 s) TV (derivative-action time): 0 to 999 s (0 s) TY (valve transit time): 15, 20, 25, …, 240 s (45 s) CO1 > F12 - 0: On/off control **Function block parameters:** Hysteresis: 1.0 to 30.0 °C (5.0 °C) Min. ON time: 0 to 10 min (2 min) Min. OFF time: 0 to 10 min (2 min)
13	Damping	0	All*	CO1 > F13 - 1: OPEN signal damping (only with CO1 > F12 - 1) **Function block parameters:** Max. system deviation: 3.0 to 10.0 °C (3.0 °C)

F	Function	WE	Anl	Comments Function block parameters: value range (default setting)
14	Enable	0	All*	CO1 > F14 - 1: Release RK1 at BI15, FG1 has no function **Function block parameters:** Active when BI = ON, OFF (ON)
15	Demand processing	0	All*	CO1 > F15 - 1: Demand processing in RK1 **Note:** How the demand is processed depends on the configuration of CO1 > F16 and CO1 > F17.
16	Demand processing, 0 to 10 V	0	All*	CO1 > F16 - 1: Demand processing with 0 to 10 V signal at input terminals 19/23 **Function block parameters:** Lower transmission range: 0 to 150 °C (0 °C) Upper transmission range: 0 to 150 °C (120 °C)
17	Binary demand processing	0	Not for systems with SF3	CO1 > F17 - 1: Binary demand processing at input terminals 17/18 **Function block parameters:** Active when BI = ON, OFF (ON)
18	External demand	0	All*	CO1 > F18 - 1: External demand 0 to 10 V The standardized signal output (terminals 20/21) is not available anymore as a control output. The maximum flow set point (with boost, if applicable) is demanded as a 0 to 10 V signal at the standardized signal output. **Function block parameters:** Lower transmission range: 0.0 to 150.0 °C (0.0 °C) Upper transmission range: 0.0 to 150.0 °C (120.0 °C) Boost: 0.0 to 30.0 °C (0.0 °C)
20	Demand for external heat	0	All*	CO1 > F20 - 1: External demand for heat due to insufficient heat supply
21	SLP speed control	0	System Anl 16.x only	CO1 > F21 - 1: Activation of speed reduction **Function block parameters:** Start speed reduction: 5.0 to 90.0 °C (40.0 °C) Stop speed reduction: 5.0 to 90.0 °C (50.0 °C) Min. speed signal: 0 to 10 V (>2 V)

F Function block number, WE Default setting, Anl System code number

CO2: RK2 · Heating circuit 2
(systems Anl 3.1–3.4, 4.x, 5.x, 6.0, 10.x, 16.1, 16.6, 16.8, 25.0, 25.5)*

F	Function	WE	Anl	Comments Function block parameters: value range (default setting)
01	Room sensor	0	All*	CO2 > F01 - 1: Room sensor RF2, temperature reading and FG2 input for Type 5257-5 Room Panel active
02	Outdoor sensor	0	All*	CO2 > F02 - 1: Outdoor sensor AF2 CO2 > F02 - 0: Use of measured value AF1
03	Return flow sensor	0	3.1–3.4, 4.x–6.x, 10.1–10.3, 16.x	CO2 > F03 - 1: Return flow sensor RüF2, limitation function active **Function block parameters:** KP (limiting factor): 0.1 to 10.0 (1.0)
		1	10.0, 10.5, 25.x	
04	Cooling control	0	All*	CO2 > F04 - 1: Cooling control The cooling control function causes a reversal of the operating direction and a minimum limitation of the return flow temperature in RK2.
05	Underfloor heating	0	All*	CO2 > F05 - 1: Underfloor heating/drying of jointless floors **Function block parameters:** Start temperature: 20 to 60 °C (25 °C) Temp. rise/day: 0.0 to 10.0 °C (5.0 °C) Maximum temperature: 25.0 to 60.0 °C (45.0 °C) Duration: 0 to 10 days (4 days) Temp. reduction/day: 0.0 to 10.0 °C (0.0 °C) Start condition: Stop, Start, Hold, Reduction
07	Optimization	0	All*	CO2 > F07 - 1: Optimization of heating times (only with CO2 > F01 - 1 and CO1(2) > F02 - 1)
08	Adaptation	0	All*	CO2 > F08 - 1: Heating characteristic adaptation (only with CO2 > F01 - 1, CO1(2) > F02 - 1 and CO2 > F11 - 0)
09	Flash adaptation	0	All*	CO2 > F09 - 1: Flash adaptation of flow temperature (only with CO2 > F01 - 1) **Function block parameters:** Cycle time: 0 or 1 to 100 min (20 min) KP (gain): 0.0 to 25.0 (0.0)
11	Four-point characteristic	0	All*	CO2 > F11 - 1: Four-point characteristic (only with CO2 > F08 - 0) CO2 > F11 - 0: Gradient characteristic

F	Function	WE	Anl	Comments Function block parameters: value range (default setting)
12	Control mode (three-step)	1	All*	CO2 > F12 - 1: Three-step control **Function block parameters:** KP (gain): 0.1 to 50.0 (2.0) Tn (reset time): 1 to 999 s (120 s) TV (derivative-action time): 0 to 999 s (0 s) TY (valve transit time): 15, 20, 25, …, 240 s (45 s) CO2 > F12 - 0: On/off control **Function block parameters:** Hysteresis: 1.0 to 30.0 °C (5.0 °C) Min. ON time: 0 to 10 min (2 min) Min. OFF time: 0 to 10 min (2 min)
13	Damping	0	All*	CO2 > F13 - 1: OPEN signal damping (only with CO2 > F12 - 1) **Function block parameters:** Max. system deviation: 3.0 to 10.0 °C (3.0 °C)
14	Enable	0	All*	CO2 > F14 - 1: Release RK2 at BI16, FG2 has no function **Function block parameters:** Active when BI = ON, OFF (ON)

F Function block number, WE Default setting, Anl System code number

CO3: RK3 · Heating circuit 3
(systems Anl 5.x, 6.x, 9.x, 12.x, 13.x, 15.x, 16.5, 16.7, 16.8, 21.x, 25.x)*

F	Function	WE	Anl	Comments Function block parameters: value range (default setting)
01	Room sensor	0	All*	CO3 > F01 - 1: Room sensor RF3, temperature reading and FG3 input for Type 5257-5 Room Panel active
02	Outdoor sensor	0	All*	CO3 > F02 - 1: Outdoor sensor AF2 CO3 > F02 - 0: Use of measured value AF1
03	Return flow sensor	0	5.x, 6.x, 9.x, 12.x, 13.x, 15.x, 16.5, 16.7, 16.8, 21.1, 21.9	CO3 > F03 - 1: Return flow sensor RüF2, limitation function active **Function block parameters:** KP (limiting factor): 0.1 to 10.0 (1.0)
		1	21.2, 25.x	

F	Function	WE	Anl	Comments Function block parameters: value range (default setting)
04	Cooling control	0	All*	CO3 > F04 - 1: Cooling control The cooling control function causes a reversal of the operating direction and a minimum limitation of the return flow temperature in RK3.
05	Underfloor heating	0	All*	CO3 > F05 - 1: Underfloor heating/drying of jointless floors **Function block parameters:** Start temperature: 20 to 60 °C (25 °C) Temp. rise/day: 0.0 to 10.0 °C (5.0 °C) Maximum temperature: 25.0 to 60.0 °C (45.0 °C) Duration: 0 to 10 days (4 days) Temp. reduction/day: 0.0 to 10.0 °C (0.0 °C) Start condition: Stop, Start, Hold, Reduction
07	Optimization	0	All*	CO3 > F07 - 1: Optimization of heating times (only with CO3 > F01 - 1 and CO1(3) > F02 - 1)
08	Adaptation	0	All*	CO3 > F08 - 1: Heating characteristic adaptation (only with CO3 > F01 - 1, CO1(3) > F02 - 1 and CO3 > F11 - 0)
09	Flash adaptation	0	All*	CO3 > F09 - 1: Flash adaptation of flow temperature (only with CO3 > F01 - 1) **Function block parameters:** Cycle time: 0 or 1 to 100 min (20 min) KP (gain): 0.0 to 25.0 (0.0)
11	Four-point characteristic	0	All*	CO3 > F11 - 1: Four-point characteristic (only with CO3 > F08 - 0) CO3 > F11 - 0: Gradient characteristic
12	Control mode (three-step)	1	All*	CO3 > F12 - 1: Three-step control **Function block parameters:** KP (gain): 0.1 to 50.0 (2.0) Tn (reset time): 1 to 999 s (120 s) TV (derivative-action time): 0 to 999 s (0 s) TY (valve transit time): 15, 20, 25, …, 240 s (45 s) CO3 > F12 - 0: On/off control **Function block parameters:** Hysteresis: 1.0 to 30.0 °C (5.0 °C) Min. ON time: 0 to 10 min (2 min) Min. OFF time: 0 to 10 min (2 min)

F	Function	WE	Anl	Comments Function block parameters: value range (default setting)
13	Damping	0	All*	CO3 > F13 - 1: OPEN signal damping (only with CO3 > F12 - 1) **Function block parameters:** Max. system deviation: 3.0 to 10.0 °C (3.0 °C)
14	Enable	0	Not for systems with SF3	CO3 > F14 - 1: Release RK3 at BI17, FG3 has no function **Function block parameters:** Active when BI = ON, OFF (ON)

F Function block number, WE Default setting, Anl System code number

CO4: DHW circuit (systems Anl 1.1–1.9, 2.x, 3.1–3.4, 4.1–4.5, 5.1, 5.2, 7.x, 8.x, 9.x, 10.1–10.3, 11.x, 12.x, 13.x, 14.x, 15.x, 21.x)*

F	Function	WE	Anl	Comments Function block parameters: value range (default setting)
01	Storage tank sensor 1 Not Anl 11.0, 11.3, 12.0, 13.0, 21.0	1	*	CO4 > F01 - 1: Storage tank sensor SF1
		0	**	CO4 > F01 - 0: Storage tank thermostat (only with CO4 > F02 - 0) * WE = 1: Anl 1.1–1.8, 2.x, 3.1–3.4, 4.1–4.5, 5.1, 5.2, 7.x–9.x, 10.1–10.3, 11.1–11.4, 12.1, 13.1, 13.2, 14.x, 15.x, 21.1, 21.2 ** WE = 0: Anl 1.9, 11.9, 12.9, 13.9, 21.9
02	Storage tank sensor 2 Not Anl 1.9, 11.0, 11.3, 11.9, 12.0, 12.9, 13.0, 13.9, 14.3, 15.3, 21.0, 21.9	0	*	CO4 > F02 - 1: Storage tank sensor SF2 (only with CO4 > F01 - 1) * WE = 1: 1.1, 1.3, 1.4, 1.5, 1.7, 1.8-2, 2.0, 2.1, 3.1, 3.3, 3.4, 4.1, 4.3, 4.5, 5.1, 7.1, 8.1, 9.1, 9.5, 10.1, 10.3, 11.1, 11.4, 11.5, 11.9, 12.1, 13.1, 14.1, 15.0, 15.1, 21.1 ** WE = 0: 1.2, 1.6, 1.8-1, 1.8-3, 1.9, 2.2, 2.3, 2.4, 3.2, 4.2, 5.2, 7.2, 8.2, 9.2, 9.6, 10.2, 11.0, 11.2, 11.3, 11.6, 12.0, 12.2, 12.9, 13.0, 13.2, 13.9, 14.2, 14.3, 15.2, 15.3, 21.0, 21.2, 21.9
		1	**	
03	Return flow sensor RüF2	0	1.9, 7.x, 8.x, 11.x, 12.x, 13.x, 21.x	CO4 > F03 - 1: Return flow sensor RüF2, limitation function active **Function block parameter:** KP (limiting factor): 0.1 to 10.0 (1.0)
04	Flow rate sensor	0	1.9, 11.9, 12.9, 13.9, 21.9	CO4 > F04 - 1: Flow rate sensor at BI17 **Function block parameter:** Select: Analog/binary (analog)* * Analog = Water flow sensor (1400-9246) Binary = Flow switch at terminals 17/18

F	Function	WE	Anl	Comments Function block parameters: value range (default setting)
05	Flow sensor	0	1.1–1.4, 1.6, 1.8, 1.9, 2.2, 2.4, 3.2, 3.4, 4.2, 5.2, 7.2, 8.2, 9.2, 9.6, 10.1–10.3, 11.2, 11.9, 12.2, 12.9, 13.2, 13.9, 21.2, 21.9	CO4 > F05 - 1: Flow sensor VF4 (to measure storage tank charging temperature)
06	Parallel pump operation	1	8.x, 9.5, 9.6	CO4 > F06 - 1: Parallel pump operation **Function block parameters:** Stop: 0 to 10 min (10 min) Temperature limit: 20.0 to 90.0 °C (40.0 °C)
		0	2.1–2.4, 4.1–4.5	CO4: F06 - 0 > UP1 switched off during DHW heating
07	Intermediate heating	1	2.x, 4.1–4.5	CO4 > F07 - 1: after 20 minutes of DHW heating, heating operation in UP1 circuit reactivated for 10 minutes
		0	8.x, 9.5, 9.6	CO4 > F07 - 0: storage tank charging is given unlimited priority concerning UP1 circuit
08	Priority (reverse)	0	1.1–1.4, 3.1–3.4, 4.1–4.5, 5.1, 5.2, 9.x, 10.1–10.3, 11.x, 12.x, 13.x, 15.0, 15.4, 15.5, 21.x	CO4 > F08 - 1: Priority by reverse control (only with CO4 > F09 - 0) **Function block parameters:** Start: 0 to 10 min (2 min) KP (influence factor): 0.1 to 10.0 (1.0) only system Anl 4.5: Control circuit: HC1, HC2, HC1+HC2 (HC2)
09	Priority (set-back)	0		CO4 > F09 - 1: Priority through set-back operation (only when CO4 > F08 - 0) **Function block parameters:** Start: 0 to 10 min (2 min) Control circuit: HC1, HC2, HC3, HC1+HC2, HC1+HC3
10	Circulation pump (DHW) integrated into heat exchanger	0	1.8, 7.2, 9.2, 11.4, 12.2, 13.2, 21.2	CO4 > F10 - 1: Control of DHW circuit active while circulation pump (ZP) is running
		1	11.6, 13.6	

F	Function	WE	Anl	Comments Function block parameters: value range (default setting)
11	Operation of circulation pump (DHW) during storage tank charging	0	Not Anl 1.9, 11.0, 11.3, 11.9, 12.0, 12.9, 13.0, 13.9, 21.0, 21.9	CO4 > F11 - 1: Circulation pump (ZP) runs according to time schedule during storage tank charging CO4 > F11 - 0: Circulation pump (ZP) switched off during storage tank charging
12	Control mode	1	1.9, 7.x, 8.x, 9.x, 11.x, 12.x, 13.x, 21.x	CO4 > F12 - 1: Three-step control **Function block parameters:** KP (gain): 0.1 to 50.0 (2.0) Tn (reset time): 1 to 999 s (120 s) TV (derivative-action time): 0 to 999 s (0 s) TY (valve transit time): 15, 20, 25, …, 240 s (45 s) CO4 > F12 - 0: On/off control **Function block parameters:** Hysteresis: 1.0 to 30.0 °C (5.0 °C) Min. ON time: 0 to 10 min (2 min) Min. OFF time: 0 to 10 min (2 min)
13	Damping	0	All*	CO4 > F13 - 1: OPEN signal damping (only with CO4 > F12 - 1) **Function block parameters:** Max. system deviation: 3.0 to 10.0 °C (3.0 °C)
14	Thermal disinfection	0	All*	CO4 > F14 - 1: Thermal disinfection (only with CO4 > F01 - 1) **Function block parameters >** Day of week: Monday, Tuesday, ..., daily (Wednesday) Time: Adjustable as required in steps of 15 minutes (00:00 – 04:00) Disinfection temperature: 60.0 to 90.0 °C (70.0 °C) Duration: 0 to 255 min (0 min) Active when BI = ON, OFF (ON)
15	SLP depending on return flow temperature	0	1.5–1.8, 2.0, 2.1, 2.3, 3.1, 3.3, 4.1, 4.3, 5.1, 11.1, 11.2	CO4 > F15 - 1: storage tank charging pump not ON unless return flow hot (only with CO1 > F03 - 1 for systems Anl 1.5–1.8, 2.0, 2.1, 2.3, 4.1, 4.3, 5.1; only with CO4 > F03 - 1 for systems Anl 11.1 and 11.2)
16	Priority for external demand	0	1.5–1.8, 2.x, 3.1–3.4, 4.1–4.3, 5.x, 15.0, 15.4, 15.5	CO4 > F16 - 1: Priority for external demand **Note:** a high external demand causes excessive charging temperatures in DHW circuits without control valve

F	Function	WE	Anl	Comments Function block parameters: value range (default setting)
19	Switchover	0	Not Anl 1.9, 11.0, 11.3, 11.9, 12.0, 12.9, 13.0, 13.9, 21.0, 21.9	CO4 > F19 - 1: Switchover SF1, SF2 according to a time schedule. SF1 applies for day mode and SF2 for night mode (only with CO4 > F02 - 1)
20	Return flow control	0	7.1, 8.1, 9.1, 9.5, 11.1, 12.1, 13.1, 21.1	CO4 > F20 - 1: DHW circuit additionally controlled by a globe valve
21	SLP speed control	0	1.5–1.8, 2.x, 3.1–3.4, 4.1–4.3, 5.1, 5.2, 7.x, 8.x, 9.x, 10.1–10.3, 11.1–11.4, 12.1, 12.2, 13.1, 13,2, 21.1, 21.2	CO4 > F21 - 1: Activation of speed reduction and storage tank sensor SF2 **Function block parameters:** Start speed reduction: 5.0 to 90.0 °C (40.0 °C) Stop speed reduction: 5.0 to 90.0 °C (50.0 °C) Min. speed signal: 0 to 10 V (2 V)

F Function block number, WE Default setting, Anl System code number

CO5: System-wide functions (all systems)

If the controller indicates CO5 > F00 - 1, any access to the return flow, flow rate and capacity settings is locked.

F	Function	WE	Anl	Comments Function block parameters: value range (default setting)
01	Sensor type	1	All*	CO5 > F01 - 1, F02 - 0: Pt 1000 CO5 > F01 - 0, F02 - 0: PTC CO5 > F01 - 1, F02 - 1: Ni 1000
02				
03				
04	Summer mode	0	Not systems Anl 1.5, 1.6, 1.9, 3.5	CO5 > F04 - 1: Summer mode **Function block parameters:** Time: Adjustable as required (01.06. - 30.09.) No. days until activation: 1 to 3 (2) No. days until deactivation: 1 to 3 (1) Limit: 0.0 to 30.0 °C (18.0 °C)

F	Function	WE	Anl	Comments Function block parameters: value range (default setting)
05	Delayed outdoor temperature adaptation (decreasing)	0	Not Anl 1.9	CO5 > F05 - 1: Delayed outdoor temperature adaptation as the temperature falls **Function block parameters:** Delay/h: 1.0 to 6.0 °C (3.0 °C)
06	Delayed outdoor temperature adaptation (increasing)	0	Not Anl 1.9	CO5 > F06 - 1: Delayed outdoor temperature adaptation as the temperature rises **Function block parameters:** Delay/h: 1.0 to 6.0 °C (3.0 °C)
07	Error message	0	Not systems Anl. 5.1, 5.2, 9.x, 12.1, 12.2-x, 13.1, 13.2, 13.6, 15.1, 15.2, 15.3, 21.1, 21.2	CO5 > F07 - 1: Terminal for error message: see section *5* (plant scheme table) **Function block parameters:** Relay contact = NO contact, NC contact (NO contact)
08	Summer time	0	All	CO5 > F08 - 1: Summer/standard time switchover
09	Frost protection	1	Not systems Anl 1.5, 1.6, 1.9, 3.5	CO5 > F09 - 1: Highest priority for frost protection **Function block parameters:** Limit: –15.0 to 3.0 °C (3.0 °C) CO5 > F09 - 0: Restricted frost protection **Function block parameters:** Limit: –15.0 to 3.0 °C (3.0 °C)
		0	1.5, 1.6, 1.9, 3.5	
10	Capacity limitation	0	Not for systems with SF3, not system Anl 1.9	CO5 > F10 - 1: Capacity limitation in RK1 with pulses (only with CO6 > F12 - 0) Input terminals 17/18 **Function block parameters:** Max. limit: AT to 800 pulse/h (15 pulse/h) Max. limit for heating*: AT to 800 pulse/h (15 pulse/h) Max. limit for DHW*: 3 to 800 pulse/h (15 pulse/h) Limiting factor: 0.1 to 10.0 (1.0) * Not systems Anl 1.0, 1.5-1.9, 3.0, 3.5, 4.0, 7.x, 10.x, 11.x, 12.x, 13.x, 14.x, 15.x, 16.x, 21.x, 25.x
12	Creep feed rate limitation	0	Not Anl 1.9	CO5 > F12 - 1: Creep feed rate limitation **Function block parameters:** Switching mode: Binary, analog (binary) Active when BI = ON, OFF (ON)

F	Function	WE	Anl	Comments Function block parameters: value range (default setting)
14	Operation UP1	0	3.0, 5.0, 7.x, 12.x, 15.1, 16.1, 16.5, 16.7, 16.8	CO5 > F14 - 1: Feeder pump UP1 operation to cover own demand **Note:** the feeder pump UP1 also starts to operate to cover the demand of RK2.
15	Enable	0	All	CO1 > F15 - 1: Release controller at BI15, FG1 has no function **Function block parameters:** Active when BI = ON, OFF (ON)
16	Return flow temperature limitation (proportional controller)	0	All	CO5 > F16 - 1: Return flow temperature limitation with P algorithm
19	Monitoring	0	All	CO5 > F19 - 1: Temperature monitoring
20	Sensor calibration	1	All	CO5 > F20 - 1: Set all sensor calibration values CO5 > F20 - 0: Delete all sensor calibration values
21	Lock manual level	0	All	CO5 > F21 - 1: Lock rotary switch In ✍ switch position, the controller runs in automatic mode
22	Lock rotary switch	0	All	CO5 > F22 - 1: Lock rotary switch Key number input is still possible.
23	0 to 10 V signal for outdoor temperature	0	All	CO5 > F23 - 1: Outdoor temperature received as 0 to 10 V signal (terminals 19/23) or sent (terminals 20/21) **Function block parameters:** Direction: Input, Output (Input) Lower transmission range: –30.0 to 100.0 °C (–20.0 °C) Upper transmission range: –30.0 to 100.0 °C (50.0 °C)

F Function block number, WE Default setting, Anl System code number

CO6 > Modbus (all systems)

F	Function	WE	Anl	Comments Function block parameters: value range (default setting)
01	Modbus	1	All	CO6 > F01 - 1: Modbus active
02	16-bit address	0	All	CO6 > F02 - 1: Modbus 16-bit addressing (only with CO6 > F01 - 1) CO6 > F02 - 0: Modbus 8-bit addressing
03	Modem	0	All	CO6 > F03 - 1: Modem function (depends on CO6 > F01 - 1 and CO6 > F08 - 1)

F	Function	WE	Anl	Comments Function block parameters: value range (default setting)
04	Automatic configuration	0	All	CO6 > F04 - 1: Automatic modem configuration (depends on CO6 > F03 - 1 and CO6 > F08 - 1)
05	Lock dial-up to building automation system	0	All	CO6 > F05 - 1: Lock dial-up to building automation system (only with CO6 > F03 - 1)
06	Dial-up also upon corrected error	0	All	CO6 > F06 - 1: Dial-up to building automation system also to indicate that an error has been corrected (only when CO6 > F03 - 1)
07	Monitoring	0	All	CO6 > F07 - 1: Control system monitoring > Resets all level bits to "autonomous" when there is no communication (only with CO6 > F01 - 1)
08	Text message	0	All	CO6 > F08 - 1: Text message function active
10	Meter bus	0	All	CO6 > F10 - 1: Meter bus active **Function block parameters:** WMZ1...3 address/0 to 255 (255) WMZ1...3 model code/1434, CAL3, APAtO, SLS (1434) WMZ1...3 reading mode/24h, CONT, CoiL (24 h)
11	Flow rate limitation in RK1	0	Not Anl 1.9	CO6 > F11 - 1: Flow rate limitation (only with CO6 > F10 - 1 and when WMZ1 is activated) **Function block parameters:** Max. limit/AT to 650 m³/h (1.5 m³/h) Max. limit for heating*/AT to 650 m³/h (1.5 m³/h) Max. limit for DHW*/0.01 to 650 m³/h (1.5 m³/h) Limiting factor/0.1 to 10 (1)
12	Capacity limitation in RK1	0	Not Anl 1.9	CO6 > F12 - 1: Capacity limitation (only with CO6 > F10 - 1 and when WMZ1 is activated) **Function block parameters:** Max. limit/AT to 6500 kW (1.5 kW) Max. limit for heating*/AT to 6500 kW (1.5 kW) Max. limit for DHW*/0.1 to 6500 kW (1.5 kW) Limiting factor/0.1 to 10 (1)
13	Flow rate limitation in RK2	0	3.0–3.4, 4.x, 7.x, 8.x, 10.x, 11.x, 12.x, 13.x, 15.x, 16.1, 16.6, 16.8, 21.x, 25.x	CO6 > F13 - 1: Flow rate limitation (only with CO6 > F10 - 1 and when WMZ2 is activated) **Function block parameters:** Max. limit/0.01 to 650 m³/h (1.5 m³/h) Limiting factor/0.1 to 10 (1)

F	Function	WE	Anl	Comments Function block parameters: value range (default setting)
14	Capacity limitation in RK2	0	3.0–3.4, 4.x, 7.x, 8.x, 10.x, 11.x, 12.x, 13.x, 15.x, 16.1, 16.6, 16.8, 21.x, 25.x	CO6 > F14 - 1: Capacity limitation (only with CO6 > F10 - 1 and when WMZ2 is activated) **Function block parameters:** Max. limit/0.1 to 6500 kW (1.5 kW) Limiting factor/0.1 to 10 (1)
15	Flow rate limitation in RK3		12.x, 13.x, 15.x, 16.5, 16.7, 16.8, 21.x, 25.x	CO6 > F15 - 1: Flow rate limitation (only with CO6 > F10 - 1 and when WMZ3 is activated) **Function block parameters:** Max. limit/0.01 to 650 m^3/h (1.5 m^3/h) Limiting factor/0.1 to 10 (1)
16	Capacity limitation in RK3			CO6 > F16 - 1: Capacity limitation (only with CO6 > F10 - 1 and when WMZ3 is activated) **Function block parameters:** Max. limit/0.1 to 6500 kW (1.5 kW) Limiting factor/0.1 to 10 (1)
	* Not system Anl 1.0, 1.5-1.8, 3.0, 3.5, 4.0, 7.x, 10.x, 11.x, 12.x, 13.x, 14.x, 15.x, 16.x, 21.x, 25.x			

F Function block number, WE Default setting, Anl System code number

CO7 > Device bus

F	Function	WE	Anl	Comments Function block parameters: value range (default setting)
01	Device bus	0	All	CO7 > F01 - 1: Device bus active **Function block parameters:** Device bus address/Auto*, 1 to 32 (32) * Auto = Automatic search for a free device bus address in the system
02	Clock synchronization	0	All	CO7 > F02 - 1: controller sends its system time to all device bus participants once every 24 hours
03	Room panel RK1	0	1.0–1.4, 2.x, 4.x, 6.0, 9.5, 9.6, 10.x, 11.x, 13.x, 21.x, 25.x	CO7 > F03 - 1: communication with TROVIS 5570 for RK1 active, CO1 > F01 - 1 automatically set **Function block parameters:** Device bus address/Auto*, 1 to 32 (32) * Auto = Automatic search for a room panel set to detection mode

F	Function	WE	Anl	Comments Function block parameters: value range (default setting)
04	Room panel RK2	0	3.0–3.4, 4.x, 5.x, 6.0, 10.x, 16.1, 16.6, 16.8, 25.x	CO7 > F04 - 1: communication with TROVIS 5570 for RK2 active, CO2 > F01 - 1 automatically set **Function block parameters:** Device bus address/Auto*, 1 to 32 (32) * Auto = Automatic search for a room panel set to detection mode
05	Room panel RK3	0	5.x, 6.0, 9.x, 12.x, 13.x, 15.x, 16.5, 16.7, 16.8, 21.x, 25.x	CO7 > F05 - 1: communication with TROVIS 5570 for RK3 active, CO3 > F01 - 1 automatically set **Function block parameters:** Device bus address/Auto*, 1 to 32 (32) * Auto = Automatic search for a room panel set to detection mode
06	Send AF1	0	All	CO7 > F06 - 1: **Function block parameters:** Register number/1 to 4 (1)
07	Receive AF1	0	All	CO7 > F07 - 1: **Function block parameters:** Register number/1 to 4 (1)
08	Send AF2	0	All	CO7 > F08 - 1: Analysis active **Function block parameters:** Register number/1 to 4 (2)
09	Receive AF2	0	Not Anl 1.9	CO7 > F09 - 1: **Function block parameters:** Register number/1 to 4 (2)
10	Send demand in RK1	0	All	CO7 > F10 - 1: Send demand **Function block parameter: ***
11	Send demand in RK2	0	All	CO7 > F11 - 1: **Function block parameter: ***
12	Send demand in RK3	0	All	CO7 > F12 - 1: **Function block parameters: ****
13	Send demand DHW	0	All	CO7 > F13 - 1: 'Charging temperature boost' (P04) is generated in the PA4 level **Function block parameter: ***
14	Send max. demand	0	All	CO7 > F14 - 1: the controller already determines internally the maximum flow set point of its circuit and sends it this value to the primary controllers

F	Function	WE	Anl	Comments Function block parameters: value range (default setting)
15	Receive external demand in RK1	0	All	CO7 > F15 - 1: External demand processing in RK1 **Function block parameter: ***
16	Receive errors	0	All	CO7 > F16 - 1: the controller generates the 'External' message as long as the faults of the other device bus participants exist.
17	Receive external demand in RK2	0	All	CO7 > F17 - 1: External demand processing in RK2 **Function block parameter: ***
18	Receive external demand in RK3	0	All	CO7 > F18 - 1: External demand processing in RK3 **Function block parameter: ***
19	Raise return flow temperature	0	All	CO7 > F19 - 1: Return flow temperature limit in RK1 raised when 'DHW heating active' message is received over the device bus **Function block parameters: ****
20	Send 'DHW heating active'	0	All	CO7 > F20 - 1: **Function block parameters: ****
21	Receive release HC1	0	All	CO7 > F21 - 1: **Function block parameters: ****
22	Receive release HC2	0	3.1–3.4, 4.x, 5.x, 6.x, 10.x, 16.1, 16.6, 16.8, 25.x	CO7 > F22 - 1: **Function block parameters: ****
23	Receive release HC3	0	5.x, 6.x, 9.x, 12.x, 13.x, 15.x, 16.5, 16.7, 16.8, 21.x, 25.x	CO7 > F23 - 1: **Function block parameters: ****
				* Register number/5 to 64 (5) ** Register number/5 to 64 (32)
F Function block number, WE Default setting, Anl System code number				

CO8 > Initialization of BI1 and BI2 (all systems)

F	Function	WE	Anl	Comments Function block parameters: value range (default setting)
01	Analysis of BI1	0	All	CO8 > F01 - 1: Analysis active **Function block parameter: ***
02	Analysis of BI2	0	All	CO8 > F02 - 1: Analysis active **Function block parameter: ***
03	Analysis of BI3	0	All	CO8 > F03 - 1: Analysis active **Function block parameter: ***
04	Analysis of BI4	0	All	CO8 > F04 - 1: Analysis active **Function block parameter: ***
05	Analysis of BI5	0	All	CO8 > F05 - 1: Analysis active **Function block parameter: ***
06	Analysis of BI6	0	All	CO8 > F06 - 1: Analysis active **Function block parameter: ***
09	Analysis of BI9	0	All	CO8 > F09 - 1: Analysis active **Function block parameter: ***
10	Analysis of BI10	0	All	CO8 > F10 - 1: Analysis active **Function block parameter: ***
11	Analysis of BI11	0	All	CO8 > F11 - 1: Analysis active **Function block parameter: ***
12	Analysis of BI12	0	All	CO8 > F12 - 1: Analysis active **Function block parameter: ***
13	Analysis of BI13	0	All	CO8 > F13 - 1: Analysis active **Function block parameter: ***
15	Analysis of BI15	0	All	CO8 > F15 - 1: Analysis active **Function block parameter: ***
16	Analysis of BI16	0	All	CO8 > F16 - 1: Analysis active **Function block parameter: ***
17	Analysis of BI17	0	All	CO8 > F17 - 1: Analysis active **Function block parameter: ***
				* Error message when BI = 0, BI = 1, none (1)

F Function block number, WE Default setting, Anl System code number

13.2 Parameter lists

PA1: Heating circuit HC1

P	Display reading	Parameter: Value range (default setting)
01	P01 1.0	Flow gradient: 0.2 to 3.2 (1.8) 0.2 to 1.0 (1.0) with CO1 > F05 - 1
02	P02 0.0°C	Level (parallel shift): –30.0 to 30.0 °C (0.0 °C)
03	P03 50.0°C	Flow set point (day) (only with CO1 > F02 - 0 and CO1 > F09 - 1): –5.0 to 150.0 °C (50.0 °C)
04	P04 30.0°C	Flow set point (night) (only with CO1 > F02 - 0 and CO1 > F09 - 1): –5.0 to 150.0 °C (30.0 °C)

P	Display reading	Parameter: Value range (default setting)
05	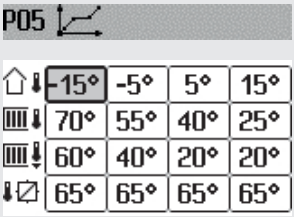	Four-point characteristic Outdoor temperature: –50.0 to 50.0 °C (–15.0 °C, –5.0 °C, 5.0 °C, 15.0 °C) –50.0 to 50.0 °C (5.0 °C, 15.0 °C, 25.0 °C, 35.0 °C)* Flow temperature: –5.0 to 150.0 °C (70.0 °C, 55.0 °C, 40.0 °C, 25.0 °C) –5.0 to 150.0 °C (20.0 °C, 15.0 °C, 10.0 °C, 5.0 °C)* Reduced flow temperature: –5.0 to 150.0 °C (60.0 °C, 40.0 °C, 20.0 °C, 20.0 °C) –5.0 to 150.0 °C (30.0 °C, 25.0 °C, 20.0 °C, 15.0 °C)* Return flow temperature: 5.0 to 90.0 °C (65.0 °C, 65.0 °C, 65.0 °C, 65.0 °C)
	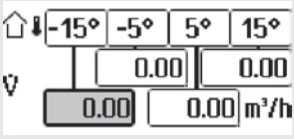	Flow rate: 0.00 to 650 m³/h (0.00 m³/h, 0.00 m³/h, 0.00 m³/h, 0.00 m³/h)
	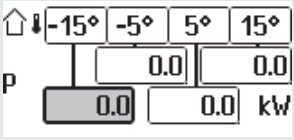	Capacity: 0.0 to 6500 kW (0.0 kW, 0.0 kW, 0.0 kW, 0.0 kW)
06	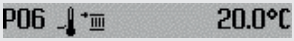	Min. flow temperature: –5.0 to 150.0 °C (20.0 °C)
07		Max. flow temperature: 5.0 to 150.0 °C (90.0 °C) 5.0 to 50.0 °C (50.0 °C) with CO1 > F05 - 1
09	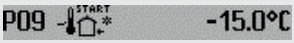	Outdoor temperature for continuous day mode: –50.0 to 5.0 °C (–15 °C)
10	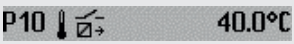	Minimum flow temperature set point HC for binary demand processing: 5.0 to 150.0 °C (40.0 °C)

P	Display reading	Parameter: Value range (default setting)
11	P11 ↖Ø 1.2	Return flow gradient (only with CO1 > F03 - 1): 0.2 to 3.2 (1.2)
12	P12 ↕Ø 0.0°C	Return flow level (only with CO1 > F03 - 1): –30.0 to 30.0 °C (0.0 °C)
13	P13 🌡Ø 65.0°C	Base point for return flow temperature (only with CO1 > F03 - 1): 5.0 to 90.0 °C (65.0 °C)
14	P14 🌡Ø 65.0°C	Base point for return flow temperature (only with CO1 > F03 - 1): 5.0 to 90.0 °C (65.0 °C)
15	P15 🌡→Ø 5.0°C	Set point boost (pre-control circuit): 0.0 to 50.0 °C (5.0 °C)
		* With cooling control wit or without outdoor sensor

PA2: Heating circuit HC2

P	Display reading	Parameter: Value range (default setting)
01	P01 ↖▥ 1.0	Flow gradient: 0.2 to 3.2 (1.8) 0.2 to 1.0 (1.0) with CO2 > F05 - 1
02	P02 ↕▥ 0.0°C	Level (parallel shift): –30.0 to 30.0 °C (0.0 °C)
03	P03 50.0°C	Flow set point (day) (only with CO1, CO2 > F02 - 0 and CO2 > F09 - 1): –5.0 to 150.0 °C (50.0 °C)
04	P04 30.0°C	Flow set point (night) (only with CO1, CO2 > F02 - 0 and CO2 > F09 - 1): –5.0 to 150.0 °C (30.0 °C)

P	Display reading	Parameter: Value range (default setting)
05	P05 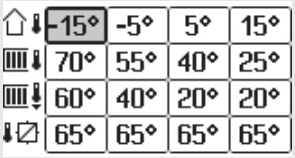 -15° -5° 5° 15° 70° 55° 40° 25° 60° 40° 20° 20° 65° 65° 65° 65°	Four-point characteristic Outdoor temperature: –50.0 to 50.0 °C (–15.0 °C, –5.0 °C, 5.0 °C, 15.0 °C) –50.0 to 50.0 °C (5.0 °C, 15.0 °C, 25.0 °C, 35.0 °C)* Flow temperature: –5.0 to 150.0 °C (70.0 °C, 55.0 °C, 40.0 °C, 25.0 °C) –5.0 to 150.0 °C (20.0 °C, 15.0 °C, 10.0 °C, 5.0 °C)* Reduced flow temperature: –5.0 to 150.0 °C (60.0 °C, 40.0 °C, 20.0 °C, 20.0 °C) –5.0 to 150.0 °C (30.0 °C, 25.0 °C, 20.0 °C, 15.0 °C)* Return flow temperature: 5.0 to 90.0 °C (65.0 °C, 65.0 °C, 65.0 °C, 65.0 °C)
06	P06 20.0°C	Min. flow temperature: –5.0 to 150.0 °C (20.0 °C)
07	P07 90.0°C	Max. flow temperature: 5.0 to 150.0 °C (90.0 °C) 5.0 to 50.0 °C (50.0 °C) with CO2 > F05 - 1
09	P09 -15.0°C	Outdoor temperature for continuous day mode: –50.0 to 5.0 °C (–15 °C)
11	P11 1.2	Return flow gradient (only with CO2 > F03 - 1): 0.2 to 3.2 (1.2)
12	P12 0.0°C	Return flow level (only with CO2 > F03 - 1): –30.0 to 30.0 °C (0.0 °C)
13	P13 65.0°C	Base point for return flow temperature (only with CO2 > F03 - 1): 5.0 to 90.0 °C (65.0 °C)
14	P14 65.0°C	Max. return flow temperature: 5.0 to 90.0 °C (65.0 °C)
		* With cooling control wit or without outdoor sensor

PA3: Heating circuit HC3

P	Display reading	Parameter: Value range (default setting)
01	P01 1.0	Flow gradient: 0.2 to 3.2 (1.8) 0.2 to 1.0 (1.0) with CO3 > F05 - 1
02	P02 0.0°C	Level (parallel shift): –30.0 to 30.0 °C (0.0 °C)
03	P03 50.0°C	Flow set point (day) (only with CO1, CO3 > F02 - 0 and CO3 > F09 - 1): –5.0 to 150.0 °C (50.0 °C)
04	P04 30.0°C	Flow set point (night) (only with CO1, CO3 > F02 - 0 and CO3 > F09 - 1): –5.0 to 150.0 °C (30.0 °C)
05	P05 –15° –5° 5° 15° 70° 55° 40° 25° 60° 40° 20° 20° 65° 65° 65° 65°	Four-point characteristic Outdoor temperature: –50.0 to 50.0 °C (–15.0 °C, –5.0 °C, 5.0 °C, 15.0 °C) –50.0 to 50.0 °C (5.0 °C, 15.0 °C, 25.0 °C, 35.0 °C)* Flow temperature: –5.0 to 150.0 °C (70.0 °C, 55.0 °C, 40.0 °C, 25.0 °C) –5.0 to 150.0 °C (20.0 °C, 15.0 °C, 10.0 °C, 5.0 °C)* Reduced flow temperature: –5.0 to 150.0 °C (60.0 °C, 40.0 °C, 20.0 °C, 20.0 °C) –5.0 to 150.0 °C (30.0 °C, 25.0 °C, 20.0 °C, 15.0 °C)* Return flow temperature: 5.0 to 90.0 °C (65.0 °C, 65.0 °C, 65.0 °C, 65.0 °C)
06	P06 20.0°C	Min. flow temperature: –5.0 to 150.0 °C (20.0 °C)
07	P07 90.0°C	Max. flow temperature: 5.0 to 150.0 °C (90.0 °C) 5.0 to 50.0 °C (50.0 °C) with CO3 > F05 - 1
09	P09 START -15.0°C	Outdoor temperature for continuous day mode: –50.0 to 5.0 °C (–15 °C)
11	P11 1.2	Return flow gradient (only with CO3 > F03 - 1): 0.2 to 3.2 (1.2)
12	P12 0.0°C	Return flow level (only with CO3 > F03 - 1): –30.0 to 30.0 °C (0.0 °C)

P	Display reading	Parameter: Value range (default setting)
13	P13 65.0°C	Base point for return flow temperature (only with CO3 > F03 - 1): 5.0 to 90.0 °C (65.0 °C)
14	P14 65.0°C	Max. return flow temperature: 5.0 to 90.0 °C (65.0 °C)
		* With cooling control wit or without outdoor sensor

PA4: Domestic hot water heating (DHW)

P	Display reading	Parameter: Value range (default setting)
01	P01 40.0°C	Min. adjustable DHW set point: 5.0 to 90.0 °C (40.0 °C)
02	P02 60.0°C	Max. adjustable DHW set point: 5.0 to 90.0 °C (90.0 °C)
03	P03 5.0°C	Hysteresis: 1.0 to 30.0 °C (5.0 °C)
04	P04 10.0°C	Charging temperature boost: 0.0 to 50.0 °C (10.0 °C)
05	P05 80.0°C	Max. charging temperature (only with CO4 > F05 - 1): 20.0 to 150.0 °C (80.0 °C)
06	P06 1.0	Lag time for storage tank charging pump = Valve transit time x P06: 0.0 to 10.0 (1.0)
07	P07 65.0°C	Max. return flow temperature: 20.0 to 90.0 °C (65.0 °C)
10	P10 10.0°C	Solar circuit pump ON: 1.0 to 30.0 °C (10.0 °C)
11	P11 3.0°C	Solar circuit pump OFF: 0.0 to 30.0 °C (3.0 °C)
12	P12 80.0°C	Max. storage tank temperature: 20.0 to 90.0 °C (80.0 °C)
14	P14 100%	Control signal DHW for storage tank charging: 5 to 100 % (100 %)

PA5: System-wide parameters

P	Display reading	Parameter: Value range (default setting)
01	P01 60.0°C	Start temperature for boiler pump (only systems Anl 14.1, 14.2, 15.1, 15.2, 16.2, 16.4, 16.5, 16.7): 20.0 to 90.0 °C (60.0 °C)
02	P02 5.0°C	Boiler pump hysteresis (only system Anl 14.1, 14.2, 15.1, 15.2, 16.2, 16.4, 16.5, 16.7): 0.0 to 30.0 °C (5.0 °C)

PA6: Modbus

P	Display reading	Parameter: Value range (default setting)
01	P01 ADR 1	Modbus station address (8 bit): 1 to 246 (255) 1 to 3200 (255) with CO6 > F02 - 1
03	P03 1	Modem init. time: 1 to 255 min (1 min)
04	P04 t_P 5	Modem dialing pause (P): 0 to 255 min (5 min)
05	P05 t_T 5	Modem timeout (T): 1 to 255 min (5 min)
06	P06 ##$_C$ 15	Number of redialing attempts: 1 to 255 (15)
07	P07 0	Phone number of control station: Max. 22 characters; 1, 2, 3, ..., 9, 0 - for end of a string; P for pause
08	P08 0	Access number: Max. 22 characters; 1, 2, 3, ..., 9, 0 - for end of a string; P for pause
09	P09 0	Mobile phone number: Max. 22 characters; 1, 2, 3, ..., 9, 0 - for end of a string; P for pause

13.3 Resistance values

Pt 1000

Temperature °C	–35	–30	–25	–20	–15	–10	–5	0	5	10	15	20
Resistance Ω	862.5	882.2	901.9	921.6	941.2	960.9	980.4	1000.0	1019.5	1039.0	1058.5	1077.9
Temperature °C	25	30	35	40	45	50	55	60	65	70	75	80
Resistance Ω	1097.3	1116.7	1136.1	1155.4	1174.7	1194.0	1213.2	1232.4	1251.6	1270.8	1289.9	1309.0
Temperature °C	85	90	95	100	105	110	115	120	125	130	135	140
Resistance Ω	1328.1	1347.1	1366.1	1385.1	1404.0	1422.9	1441.8	1460.7	1479.5	1498.3	1517.1	1535.8
Temperature °C	145	150	155	160	165	170	175	180	185	190	195	200
Resistance Ω	1554.6	1573.3	1591.9	1610.5	1629.1	1647.7	1666.3	1684.8	1703.3	1721.7	1740.2	1758.6

PTC

Temperature °C	–20	–10	0	10	20	30	40	50
Resistance Ω	693	756	824	896	971	1050	1133	1220

Temperature °C	60	70	80	90	100	110	120
Resistance Ω	1311	1406	1505	1606	1713	1819	1925

Type 5244 (remote control unit)

Switch position ⏲, terminals 1 and 2

Temperature °C	10	15	20	25	30
Resistance Ω	679	699	720	741	762

Ni 1000

Temperature °C	–60	–50	–40	–30	–20	–10	0	10	20	30	40
Resistance Ω	695	743	791	841	893	946	1000	1056	1112	1171	1230

Temperature °C	50	60	70	80	90	100	110	120	130	140	150
Resistance Ω	1291	1353	1417	1483	1549	1618	1688	1760	1833	1909	1986

Temperature °C	160	170	180	190	200	210	220	230	240	250
Resistance Ω	2066	2148	2232	2318	2407	2498	2592	2689	2789	2892

13.4 Technical data

Inputs	17 configurable inputs for Pt 1000, PTC or Ni 1000 temperature sensors and binary inputs One 0 to 10 V input directly for external demand or outdoor temperature signal Input 17 for a pulse signal (3 to 800 pulse/h) of a heat meter for capacity limitation in RK1
Outputs *** Switch-on surge, max. 16 A**	3 x three-step signal: load max. 250 V AC, 2 A*, alternatively 3 x on/off signal: load max. 250 V AC, 2 A* 5 x pump output: load max. 250 V AC, 2 A*, all outputs are relay outputs with varistor suppression One 0 to 10 V output for continuous-action control for RK1 control circuit or signal for external demand, load > 5 kΩ One 0/10 V output for PWM signal for pump speed control
Interfaces	M-bus for max. 3 M-bus units, protocol according to EN 1434-3 Device bus interface (RS-485) for max. 32 bus devices (two-wire bus, reverse polarity protection)
Optional interfaces	Modbus RS-232 interface for modem using RS-232 to modem communication module Modbus RS-485 interface for two-wire bus using RS-485 communication module (Modbus RTU protocol, data format 8N1, RJ 45 connector socket at the side)
Operating voltage	165 to 250 V, 48 to 62 Hz, max. 4 VA
Ambient temperature	0 to 40 °C (operation), –10 to 60 °C (storage and transport)
Degree of protection	IP 40 according to IEC 60529
Class of protection	II according to VDE 0106
Degree of contamination	2 according to VDE 0110
Overvoltage category	II according to VDE 0110
Humidity rating	F according to VDE 40040
Noise immunity	According to EN 61000-6-1
Noise emission	According to EN 61000-6-3
Weight	Approx. 0.5 kg

13.5 Customer setting

Station	
Operator	
SAMSON office	
System code number	

Function block settings in configuration levels

	CO1	CO2	CO3	CO4	CO5	CO6	CO7	CO8
F01								
F02								
F03								
F04								
F05								
F06								
F07								
F08								
F09								
F10								
F11								
F12								
F13								
F14								
F15								
F16								
F17								
F18								
F19								
F20								
F21								
F22								
F23								

Settings at the rotary switch · Set points

Parameters	Switch position	Value range
HC1 room temperature		0.0 to 40.0 °C
HC2 room temperature		
HC3 room temperature		
DHW temperature		Min. to max. DHW temp,
HC1 OT deactivation value		–50.0 to 50.0 °C
HC2 OT deactivation value		
HC3 OT deactivation value		

Parameters	Switch position	Value range
HC1 room temperature		0.0 to 40.0 °C
HC2 room temperature		
HC3 room temperature		
DHW temperature		Min. to max. DHW temp,
HC1 OT deactivation value		–50.0 to 50.0 °C
HC2 OT deactivation value		
HC3 OT deactivation value		

Settings at the rotary switch · Times-of-use · Switch position

Times-of-use HC1	Mon	Tue	Wed	Thu	Fri	Sat	Sun	Value range
Start first time-of-use								00:00 to 24:00 h
Stop first time-of-use								
Start second time-of-use								
Stop second time-of-use								
Start third time-of-use								
Stop third time-of-use								

Times-of-use HC2	Mon	Tue	Wed	Thu	Fri	Sat	Sun	Value range
Start first time-of-use								00:00 to 24:00 h
Stop first time-of-use								
Start second time-of-use								
Stop second time-of-use								
Start third time-of-use								
Stop third time-of-use								

Times-of-use HC3	Mon	Tue	Wed	Thu	Fri	Sat	Sun	Value range
Start first time-of-use								00:00 to 24:00 h
Stop first time-of-use								
Start second time-of-use								
Stop second time-of-use								
Start third time-of-use								
Stop third time-of-use								

Times-of-use DHW	Mon	Tue	Wed	Thu	Fri	Sat	Sun	Value range
Start first time-of-use								00:00 to 24:00 h
Stop first time-of-use								
Start second time-of-use								
Stop second time-of-use								
Start third time-of-use								
Stop third time-of-use								

Times-of-use ZP	Mon	Tue	Wed	Thu	Fri	Sat	Sun	Value range
Start first time-of-use								00:00 to 24:00 h
Stop first time-of-use								
Start second time-of-use								
Stop second time-of-use								
Start third time-of-use								
Stop third time-of-use								

PA1 parameters (heating circuit HC1), PA2 parameters (heating circuit HC2) and PA3 parameters (heating circuit HC3)

P	Parameters	PA1 (HC1)	PA2 (HC2)	PA3 (HC3)	Value range
01	Flow gradient				0.2 to 3.2
02	Level (parallel shift)				–30.0 to 30.0 °C
03	Flow set point (day)				–5.0 to 150.0 °C
04	Flow set point (night)				–5.0 to 150.0 °C
05	Four-point characteristic				
	Outdoor temperature, point 1				–50.0 to 50.0 °C
	Outdoor temperature, point 2				–50.0 to 50.0 °C
	Outdoor temperature, point 3				–50.0 to 50.0 °C
	Outdoor temperature, point 4				–50.0 to 50.0 °C

P	Parameters	PA1 (HC1)	PA2 (HC2)	PA3 (HC3)	Value range
05	Flow temperature, point 1				–5.0 to 150.0 °C
	Flow temperature, point 2				–5.0 to 150.0 °C
	Flow temperature, point 3				–5.0 to 150.0 °C
	Flow temperature, point 4				–5.0 to 150.0 °C
	Reduced flow temperature, point 1				–5.0 to 150.0 °C
	Reduced flow temperature, point 2				–5.0 to 150.0 °C
	Reduced flow temperature, point 3				–5.0 to 150.0 °C
	Reduced flow temperature, point 4				–5.0 to 150.0 °C
	Return flow temperature, point 1				5.0 to 90.0 °C
	Return flow temperature, point 2				5.0 to 90.0 °C
	Return flow temperature, point 3				5.0 to 90.0 °C
	Return flow temperature, point 4				5.0 to 90.0 °C
	Flow rate, point 1		–	–	0.00 to 650 m³/h
	Flow rate, point 2		–	–	0.00 to 650 m³/h
	Flow rate, point 3		–	–	0.00 to 650 m³/h
	Flow rate, point 4		–	–	0.00 to 650 m³/h
	Capacity, point 1		–	–	0.0 to 6500 kW
	Capacity, point 2		–	–	0.0 to 6500 kW
	Capacity, point 3		–	–	0.0 to 6500 kW
	Capacity, point 4		–	–	0.0 to 6500 kW
06	Min. flow temperature				–5.0 to 150.0 °C
07	Max. flow temperature				–5.0 to 150.0 °C
09	Outdoor temperature for continuous day mode				–50.0 to 5.0 °C
10	Minimum flow temperature set point HC for binary demand processing				5.0 to 150.0 °C
11	Return flow gradient				0.2 to 3.2
12	Return flow level				–30.0 to 30.0 °C
13	Base point for return flow temperature:				5.0 to 90.0 °C
14	Max. return flow temperature				5.0 to 90.0 °C
15	Set point boost (pre-control circuit)		–	–	0.0 to 50.0 °C

CO1 function block parameters (heating circuit HC1), CO2 function block parameters (heating circuit HC2) and CO3 function block parameters (heating circuit HC3)

F	Function block parameters	CO1 (HC1)	CO2 (HC2)	CO3 (HC3)	Value range
03	KP (limiting factor)				0.1 to 10.0
05	Start temperature				20.0 to 60.0 °C
	Temp. rise/day				0.0 to 10.0 °C
	Maximum temperature				25.0 to 60.0 °C
	Duration:				0 to 10 days
	Temp. reduction/day				0.0 to 10.0 °C
	Start condition				Stop, Start, Hold, Reduction
09	Cycle time				0 to 100 min
	KP (gain)				0.0 to 25.0
12	KP (gain)				0.1 to 50.0
	Tn (reset time)				1 to 999 s
	TV (derivative-action time)				0 to 999 s
	TY (valve transit time)				15 to 240 s
	Hysteresis				1.0 to 30.0 °C
	Min. ON time				0 to 10 min
	Min. OFF time				0 to 10 min
13	Max. system deviation				3.0 to 10.0 °C
14	Active when BI =				ON, OFF
16	Lower transmission range		–	–	0.0 to 150.0 °C
	Upper transmission range		–	–	0.0 to 150.0 °C
17	Active when BI =		–	–	ON, OFF
18	Lower transmission range		–	–	0.0 to 150.0 °C
	Upper transmission range		–	–	0.0 to 150.0 °C
	Boost		–	–	0.0 to 30.0 °C
21	Start speed reduction		–	–	5.0 to 90.0 °C
	Stop speed reduction		–	–	5.0 to 90.0 °C
	Min. speed signal		–	–	0 to 10 V

PA4 parameters (domestic hot water heating)

P	Parameters	PA4 (DHW)	Value range
01	Min. adjustable DHW set point		5.0 to 90.0 °C
02	Max. adjustable DHW set point		5.0 to 90.0 °C
03	Hysteresis		1.0 to 30.0 °C
04	Charging temperature boost		0.0 to 50.0 °C
05	Max. charging temperature		20.0 to 150.0 °C
06	Lag time for storage tank charging pump		0.0 to 10.0 x valve transit time
07	Max. return flow temperature		20.0 to 90.0 °C
10	Solar circuit pump ON		1.0 to 30.0 °C
11	Solar circuit pump OFF		0.0 to 90.0 °C
12	Max. storage tank temperature		20.0 to 90.0 °C

CO4 function block parameters (domestic hot water heating)

F	Function block parameters	CO4 (DHW)	Value range
03	KP (limiting factor)		0.1 to 10.0
04	Select		Analog, binary
06	Stop		0 to 10 min
	Temperature limit		20.0 to 90.0 °C
08	Start		0 to 10 min
	KP (influence factor)		0.1 to 10.0
	Control circuit		HC1, HC2, HC3, HC1+HC2, HC1+HC3
09	Start		0 to 10 min
	Control circuit		HC1, HC2, HC3, HC1+HC2, HC1+HC3
12	KP (gain)		0.1 to 50.0
	Tn (reset time)		1 to 999 s
	TV (derivative-action time)		0 to 999 s
	TY (valve transit time)		15 to 240 s
	Hysteresis		1.0 to 30.0 °C
	Min. ON time		0 to 10 min
	Min. OFF time		0 to 10 min
13	Max. system deviation		3.0 to 10.0 °C

F	Function block parameters	CO4 (DHW)	Value range
14	Day of the week		Monday to Sunday, daily
	Time		Adjustable as required
	Disinfection temperature		60.0 to 90.0 °C
	Duration		0 to 255 min
	Active when BI =		ON, OFF
21	Start speed reduction		5.0 to 90.0 °C
	Stop speed reduction		5.0 to 90.0 °C
	Min. speed signal		0 to 10 V

PA5 parameters (system-wide parameters)

P	Parameters	PA5	Value range
01	Start temperature for boiler pump		20.0 to 90.0 °C
02	Boiler pump hysteresis		0.0 to 30.0 °C

CO5 function block parameters (system-wide functions)

F	Function block parameters	CO5	Value range
04	Date		Adjustable as required
	No. days until activation		1 to 3
04	No. days until deactivation		1 to 3
	Limit		0.0 to 30.0 °C
05	Delay/h		1.0 to 6.0 °C
06	Delay/h		1.0 to 6.0 °C
07	Relay contact		NC contact, NO contact
09	Limit		–15.0 to 3.0 °C
10	Max. limit		AT to 800 pulse/h
	Max. limit for heating		AT to 800 pulse/h
	Max. limit for DHW		3 to 800 pulse/h
	Limiting factor		0.1 to 10.0
12	Switching mode		Binary, analog
	Active when BI =		ON, OFF
15	Active when BI =		ON, OFF
23	Direction		Input, Output
	Lower transmission range		–30.0 to 100.0 °C
	Upper transmission range		–30.0 to 100.0 °C

PA6 parameters (Modbus)

P	Parameters	PA6	Value range
01	Modbus station address (8 bit)		1 to 3200
03	Modem init. time		1 to 255 min
04	Modem dialing pause (P)		0 to 255 min
05	Modem timeout (T)		1 to 255 min
06	Number of redialing attempts		1 to 255
07	Phone number of control station		Adjustable as required
08	Access number		Adjustable as required
09	Mobile phone number		Adjustable as required

CO6 function block parameters (Modbus)

F	Function block parameters	CO6	Value range
10	WMZ1 address		0 to 255
	WMZ1 model code		1434, CAL3, APAtO, SLS
	WMZ1 reading mode		24h, CONT, CoiL
	WMZ2 address		0 to 255
	WMZ2 model code		1434, CAL3, APAtO, SLS
	WMZ3 reading mode		24h, CONT, CoiL
	WMZ3 address		0 to 255
	WMZ3 model code		1434, CAL3, APAtO, SLS
	WMZ3 reading mode		24h, CONT, CoiL
11	Max. limit		AT to 650 m^3/h
	Max. limit for heating		AT to 650 m^3/h
	Max. limit for DHW		0.01 to 650 m^3/h
	Limiting factor		0.1 to 10
12	Max. limit		AT to 6500 kW
	Max. limit for heating		AT to 6500 kW
	Max. limit for DHW		0.1 to 6500 kW
	Limiting factor		0.1 to 10
13	Max. limit		0.01 to 650 m^3/h
	Limiting factor		0.1 to 10
14	Max. limit		0.1 to 6500 kW
	Limiting factor		0.1 to 10

F	Function block parameters	CO6	Value range
15	Max. limit		0.01 to 650 m³/h
	Limiting factor		0.1 to 10
16	Max. limit		0.1 to 6500 kW
	Limiting factor		0.1 to 10

CO7 function block parameters (device bus)

F	Function block parameters	CO8	Value range
1	Device bus address		Auto, 1 to 32
3	Device bus address		Auto, 1 to 32
4	Device bus address		Auto, 1 to 32
5	Device bus address		Auto, 1 to 32
6	Register number		1 to 4
7	Register number		1 to 4
8	Register number		1 to 4
9	Register number		1 to 4
10	Register number		5 to 65
11	Register number		5 to 65
12	Register number		5 to 65
13	Register number		5 to 65
15	Register number		5 to 65
17	Register number		5 to 65
18	Register number		5 to 65
19	Register number		5 to 65
20	Register number		5 to 65
21	Register number		5 to 65
22	Register number		5 to 65
23	Register number		5 to 65

CO8 function block parameters (initialization of BI1 and BI2)

F	Function block parameters	CO8	Value range
1	Error message when		BI = 0, BI = 1, none (1)
2	Error message when		BI = 0, BI = 1, none (1)

F	Function block parameters	CO8	Value range
3	Error message when		BI = 0, BI = 1, none (1)
4	Error message when		BI = 0, BI = 1, none (1)
5	Error message when		BI = 0, BI = 1, none (1)
6	Error message when		BI = 0, BI = 1, none (1)
9	Error message when		BI = 0, BI = 1, none (1)
10	Error message when		BI = 0, BI = 1, none (1)
11	Error message when		BI = 0, BI = 1, none (1)
12	Error message when		BI = 0, BI = 1, none (1)
13	Error message when		BI = 0, BI = 1, none (1)
15	Error message when		BI = 0, BI = 1, none (1)
16	Error message when		BI = 0, BI = 1, none (1)
17	Error message when		BI = 0, BI = 1, none (1)

Heat meter

	Meter bus address	Model code	Reading mode
WMZ1			
WMZ2			
WMZ3			

Type 1

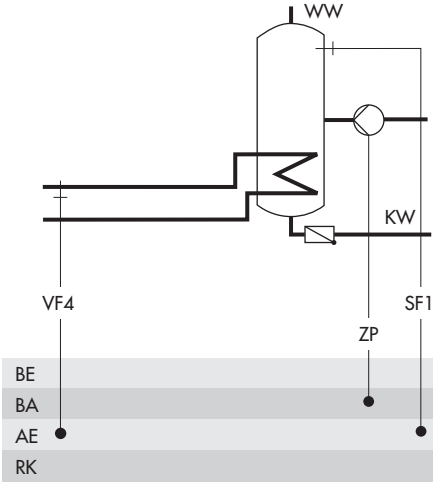

Type 2

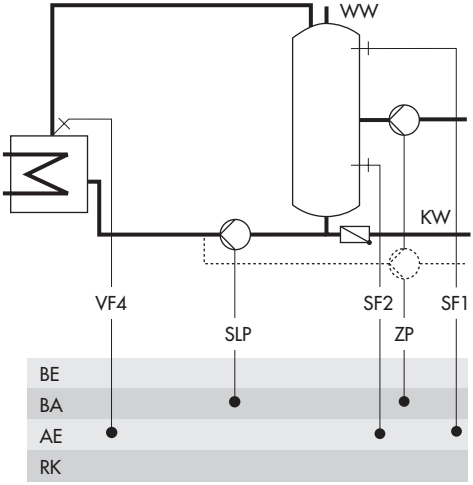

Type 3

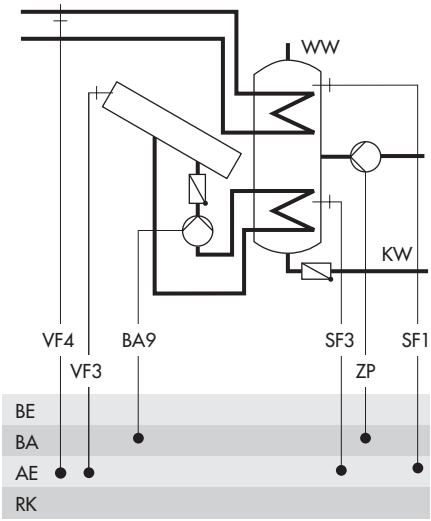

Type 4

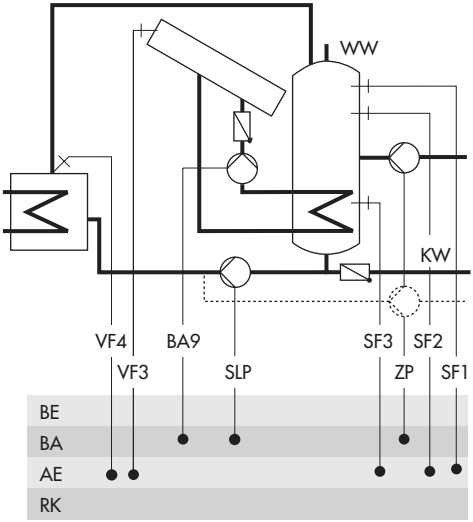

Key number	1732

SAMSON AG · MESS- UND REGELTECHNIK
Weismüllerstraße 3 · 60314 Frankfurt am Main, Germany
Phone: +49 69 4009-0 · Fax: +49 69 4009-1507
samson@samson.de · www.samson.de

EB 5578 EN

2018-02-14 · English